HIGH CORROSION RESISTANT VALVES (303 STAINLESS STEEL)

Oil Water Air

2/2

Actuation	Body	Function	Port Size	Orifice (mm)	Flow Factor Kv(l/min)	MOPD (bar)	Max Fluid Temp. (°C)	Page Parker Valves	Page Parker LUCIFER® Valves
Direct Operated	303 Stainless St./Pipe mounting	Normally Closed	1/4"	1.5 to 5	10	100	180	-	158
		Normally Open	1/4"	2.5	3	12	120	-	162

2/2 HIGH CORROSION RESISTANT VALVES (303 STAINLESS STEEL)
DIRECT OPERATED

Process

Commercial Equipment

303 STAINLESS ST. PIPE MOUNTING

NORMALLY CLOSED

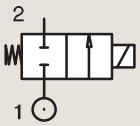

Port size	Orifice Ø	Flow factors			Operating Pressure Differential			Fluid Temp.		Seat Seal	Parker LUCIFER® Valves			IS	Power		Coil Group	Dwg. No.
					Min	Max(MOPD)		Min	Max		Valve Ref.	Housing Ref.	Coil Ref.					
BSP	mm	Kv l/min	KV m³/h	Qn l/min	bar	AC bar	DC bar	°C	°C						AC W	DC W		
1/4"	1.5	1.5	0.09	80	0	20	20	-10	100	FKM	121V5406	2995	481865		8	9	2.0	8116
	1.5	1.5	0.09	80	0	20	20	-10	120	FKM	121V5406	4270	481000		8	8	2.0	8116
	1.5	1.5	0.09	80	0	60	25	0	100	Ruby	121V5463 [1]	2995	481865		8	9	2.0	8116
	1.5	1.5	0.09	80	0	75	30	0	130	Ruby	121V5463 [1]	4270	481000		8	8	2.0	8116
	1.5	1.5	0.09	80	0	100	55	0	140	Ruby	121V5463 [1]	4270	486265		14	14	2.0	8116
	1.5	1.5	0.09	80	0	-	8	-20	75	PUR	121V5497 [2]	2995	482740		-	1.6	3.0/6.0/8.0	8024
	1.5	1.5	0.09	80	0	10	10	-20	75	PUR	121V5497 [2]	-	495900		2.5	2	3.0/6.0/8.0	8024
	1.5	1.5	0.09	80	0	-	10	-20	75	PUR	121V5497 [2]	-	495910	*	-	0.3 to 3	3.0/6.0/8.0	8024
	1.5	1.5	0.09	80	0	-	8	-20	75	PUR	121V5497 [2]	2995	496125		-	1.6	3.0/6.0/8.0	8024
	2.5	3.5	0.21	220	0	14	7	-10	100	FKM	121V5706	2995	481865		8	9	2.0	8116
	2.5	3.5	0.21	220	0	14	9	-10	120	FKM	121V5706	4270	481000		8	8	2.0	8116
	2.5	3.5	0.21	220	0	14	14	-10	120	FKM	121V5706	4270	486265		14	14	2.0	8116
	2.5	3.5	0.21	220	0	28	10	0	100	Ruby	121V5763 [1]	2995	481865		8	9	2.0	8116
	2.5	3.5	0.21	220	0	34	12	0	130	Ruby	121V5763 [1]	4270	481000		8	8	2.0	8116
	2.5	3.5	0.21	220	0	50	22	0	140	Ruby	121V5763 [1]	4270	486265		14	14	2.0	8116
	3	4.5	0.27	315	0	10	7	-10	100	FKM	121V5306	2995	481865		8	9	2.0	8116
	3	4.5	0.27	315	0	10	8.5	-10	120	FKM	121V5306	4270	481000		8	8	2.0	8116
	3	4.5	0.27	315	0	10	10	-10	120	FKM	121V5306	4270	486265		14	14	2.0	8116
	3	4.5	0.27	315	0	20	7	0	100	Ruby	121V5363 [1]	2995	481865		8	9	2.0	8116
	3	4.5	0.27	315	0	25	8.5	0	130	Ruby	121V5363 [1]	4270	481000		8	8	2.0	8116
	3	4.5	0.27	315	0	36	15	0	140	Ruby	121V5363 [1]	4270	486265		14	14	2.0	8116

Notes:

1. Valve only compatible with hydraulic oil and neutral liquids
2. Valve compatible with water only up to 40°C

For this page	Port size	Orifice (mm)	Kv (l/min)	MOPD (bar)	Fluid Temp (°C)	Amb Temp (°C)
From	1/4"	1.5	1.5	7	-20	-20
To	1/4"	3	4.5	100	140	50

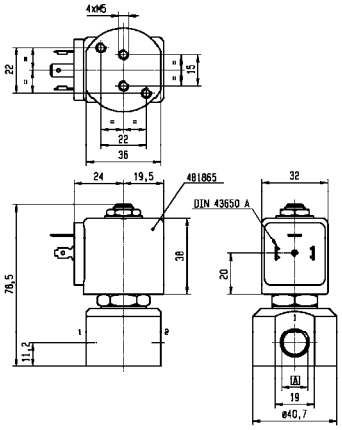

A	G 1/8"
	G 1/4"

Drawing 8116

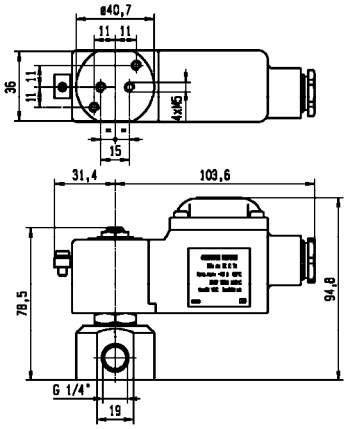

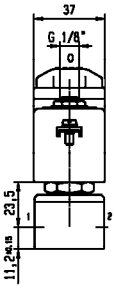

Drawing 8024

2/2 HIGH CORROSION RESISTANT VALVES (303 STAINLESS STEEL) DIRECT OPERATED

303 STAINLESS ST. PIPE MOUNTING

NORMALLY CLOSED

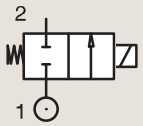

Port size	Orifice Ø	Flow factors			Operating Pressure Differential			Fluid Temp.		Seat Seal	Parker LUCIFER® Valves			IS	Power		Coil Group	Dwg. No.
					Min	Max(MOPD)		Min	Max		Valve Ref.	Housing Ref.	Coil Ref.					
BSP	mm	Kv l/min	KV m³/h	Qn l/min	bar	AC bar	DC bar	°C	°C						AC W	DC W		
	3	3.5	0.21	220	0	-	2	-20	75	PUR	121V5397 [2]	2995	482740		-	1.6	3.0/6.0/8.0	8024
	3	3.5	0.21	220	0	4.5	4	-20	75	PUR	121V5397 [2]	-	495900		2.5	2	3.0/6.0/8.0	8024
	3	3.5	0.21	220	0	-	4.5	-20	75	PUR	121V5397 [2]	-	495910	*	-	0.3 to 3	3.0/6.0/8.0	8024
	3	3.5	0.21	220	0	-	2	-20	75	PUR	121V5397 [2]	2995	496125		-	1.6	3.0/6.0/8.0	8024
	4	7	0.42	450	0	10	4	-10	100	FKM	121V5206	2995	481865		8	9	2.0	8116
	4	7	0.42	450	0	10	5	-10	120	FKM	121V5206	4270	481000		8	8	2.0	8116
	4	7	0.42	450	0	10	10	-10	120	FKM	121V5206	4270	486265		14	14	2.0	8116
	4	7	0.42	450	0	3.5	3.5	0	100	PTFE	121V5212 [1]	2995	481865		8	9	2.0	8116
	4	7	0.42	450	0	3.5	3.5	0	130	PTFE	121V5212 [1]	4270	481000		8	8	2.0	8116
	4	7	0.42	450	0	3.5	3.5	0	130	PTFE	121V5212 [1]	4270	486265		14	14	2.0	8116
1/4"	4	7	0.42	450	0	12	4	0	100	Ruby	121V5263 [1]	2995	481865		8	9	2.0	8116
	4	7	0.42	450	0	15	5	0	130	Ruby	121V5263 [1]	4270	481000		8	8	2.0	8116
	4	7	0.42	450	0	22	10	0	180	Ruby	121V5263 [1]	4270	486265		14	14	2.0	8116
	5	10	0.6	750	0	7	2	-10	100	FKM	121V5106	2995	481865		8	9	2.0	8116
	5	10	0.6	750	0	7	2.8	-10	120	FKM	121V5106	4270	481000		8	8	2.0	8116
	5	10	0.6	750	0	7	5	-10	120	FKM	121V5106	4270	486265		14	14	2.0	8116
	5	10	0.6	-	0	2.8	2	0	100	PTFE	121V5112 [1]	2995	481865		8	9	2.0	8116
	5	10	0.6	-	0	2.8	2.8	0	130	PTFE	121V5112 [1]	4270	481000		8	8	2.0	8116
	5	10	0.6	-	0	2.8	2.8	0	130	PTFE	121V5112 [1]	4270	486265		14	14	2.0	8116
	5	10	0.6	750	0	8.5	2	0	100	Ruby	121V5163 [1]	2995	481865		8	9	2.0	8116
	5	10	0.6	750	0	10	3.5	0	130	Ruby	121V5163 [1]	4270	481000		8	8	2.0	8116
	5	10	0.6	750	0	14	6.5	0	140	Ruby	121V5163 [1]	4270	486265		14	14	2.0	8116

Notes:

1. Valve only compatible with hydraulic oil and neutral liquids
2. Valve compatible with water only up to 40°C

For this page	Port size	Orifice (mm)	Kv (l/min)	MOPD (bar)	Fluid Temp (°C)	Amb Temp (°C)
From	1/4"	3	3.5	2	-20	-20
To	1/4"	5	10	22	180	50

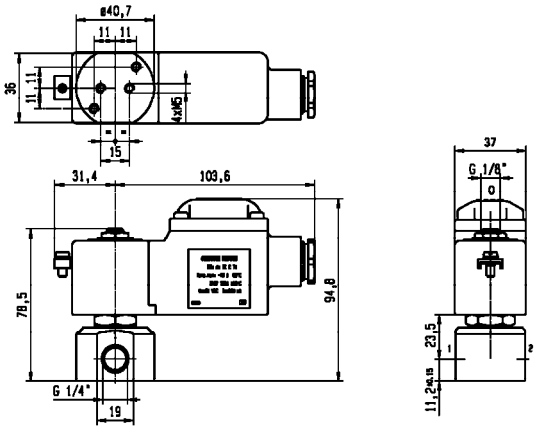

Drawing 8024

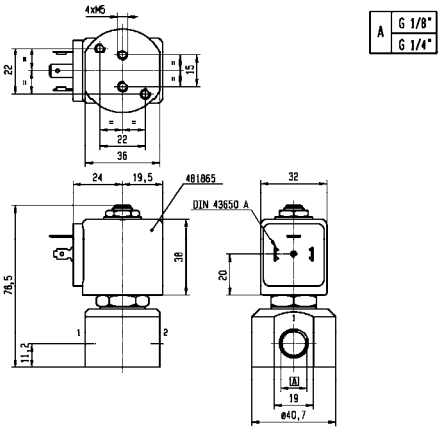

Drawing 8116

2/2 HIGH CORROSION RESISTANT VALVES (303 STAINLESS STEEL)
DIRECT OPERATED

303 STAINLESS ST.
PIPE MOUNTING
NORMALLY OPEN

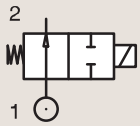

Port size	Orifice Ø	Flow factors			Operating Pressure Differential			Fluid Temp.		Seat Seal	Parker LUCIFER® Valves			Power		Coil Group	Dwg. No.
					Min	Max(MOPD)		Min	Max								
BSP	mm	Kv l/min	KV m³/h	Qn l/min	bar	AC bar	DC bar	°C	°C		Valve Ref.	Housing Ref.	Coil Ref.	AC W	DC W		
1/4"	2.5	3	0.18	180	0	12	12	-30	100	FKM	122V8306	2995	481865	8	9	2.1	8116
	2.5	3	0.18	180	0	12	12	-30	120	FKM	122V8306	4270	481000	8	8	2.1	8116

For this page	Port size	Orifice (mm)	Kv (l/min)	MOPD (bar)	Fluid Temp (°C)	Amb Temp (°C)
From	1/4"	2.5	3	12	-30	-10
To	1/4"	2.5	3	12	120	50

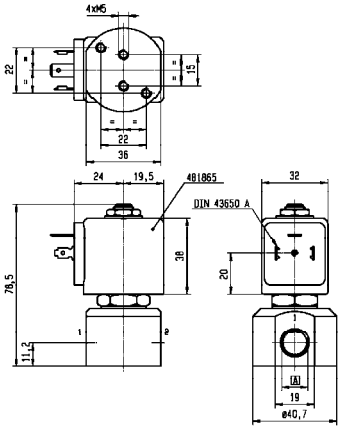

A	G 1/8"
	G 1/4"

Drawing 8116

2 WAY VALVES

HIGH CORROSION RESISTANT VALVES (316L STAINLESS STEEL)

Oil Water Air

2/2

Actuation	Body	Function	Port Size	Orifice (mm)	Flow Factor Kv(l/min)	MOPD (bar)	Max Fluid Temp. (°C)	Page Parker Valves	Page Parker LUCIFER® Valves
Direct Operated	316L Stainless St./Pipe Mounting	Normally Closed	1/4"	1.5 to 3.5	2.3	20	140	**166**	-
			1/8"	1.5 to 2.5	2.3	20	140	**166**	-
			1/2"	5 to 6.2	13	4	140	**168**	-
			3/8"	5 to 6.2	13	4	140	**168**	-
			1/4"	1	0.6	98	75	-	**170**
Magnalift	316L Stainless St./Pipe Mounting	Normally Closed	1/2"	15	50	10	140	**172**	-
			3/4"	24	95	10	140	**172**	-
			3/8"	15	40	10	140	**172**	-
			1"	24	105	10	140	**174**	-

2/2 HIGH CORROSION RESISTANT VALVES (316L STAINLESS STEEL)
DIRECT OPERATED

Commercial Equipment

Medical / Instrumentation

Industrial Equipment

316L STAINLESS ST. PIPE MOUNTING

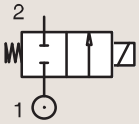

NORMALLY CLOSED

Port size	Orifice Ø	Flow factors			Operating Pressure Differential			Fluid Temp.		Seat Seal	Parker Valves			Power		Coil Group	Dwg. No.
					Min	Max(MOPD)		Min	Max		Valve Ref.	Housing Ref.	Coil Ref.				
BSP	mm	Kv l/min	KV m³/h	Qn l/min	bar	AC bar	DC bar	°C	°C					AC W	DC W		
1/8"	1.5	1	0.06	-	0	20	-	-10	140	FKM	201LG1GVG2	-	WB4.5	4.5	-	1.1/1.3	074
	1.5	1	0.06	-	0	-	10	-10	140	FKM	201LG1GVG2	-	WB5.0	-	5	1.1/1.3	074
	2	1.8	0.11	-	0	15	-	-10	140	FKM	201LG1JVG2	-	WB4.5	4.5	-	1.1/1.3	074
	2	1.8	0.11	-	0	-	7	-10	140	FKM	201LG1JVG2	-	WB5.0	-	5	1.1/1.3	074
	2.5	2.3	0.14	-	0	10	-	-10	140	FKM	201LG1LVG2	-	WB4.5	4.5	-	1.1/1.3	074
	2.5	2.3	0.14	-	0	-	4	-10	140	FKM	201LG1LVG2	-	WB5.0	-	5	1.1/1.3	074
1/4"	1.5	1	0.06	-	0	20	-	-10	140	FKM	201LG2GVG2	-	WB4.5	4.5	-	1.1/1.3	075
	1.5	1	0.06	-	0	-	10	-10	140	FKM	201LG2GVG2	-	WB5.0	-	5	1.1/1.3	075
	2	1.8	0.11	-	0	15	-	-10	140	FKM	201LG2JVG2	-	WB4.5	4.5	-	1.1/1.3	075
	2	1.8	0.11	-	0	-	7	-10	140	FKM	201LG2JVG2	-	WB5.0	-	5	1.1/1.3	075
	2.5	2.3	0.14	-	0	10	-	-10	140	FKM	201LG2LVG2	-	WB4.5	4.5	-	1.1/1.3	075
	2.5	2.3	0.14	-	0	-	4	-10	140	FKM	201LG2LVG2	-	WB5.0	-	5	1.1/1.3	075
	3	0.5	0.03	-	0	8	8	-10	140	FKM	201LG2NVG7	-	481865	8	9	2.0	076
	3	0.5	0.03	-	0	10	11	-10	140	FKM	201LG2NVG7	-	491514	13	16	2.0	076
	3.5	0.6	0.04	-	0	6	6	-10	140	FKM	201LG2PVG7	-	481865	8	9	2.0	076
	3.5	0.6	0.04	-	0	7	8	-10	140	FKM	201LG2PVG7	-	491514	13	16	2.0	076

For this page	Port size	Orifice (mm)	Kv (l/min)	MOPD (bar)	Fluid Temp (°C)	Amb Temp (°C)
From	1/8"	1.5	0.5	4	-10	-10
To	1/4"	3.5	2.3	20	140	50

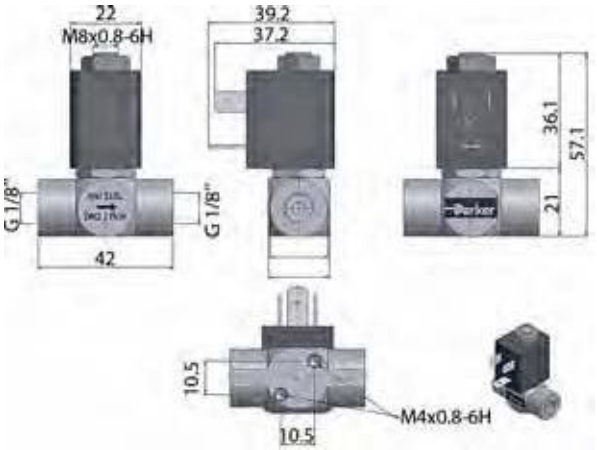

Drawing 074

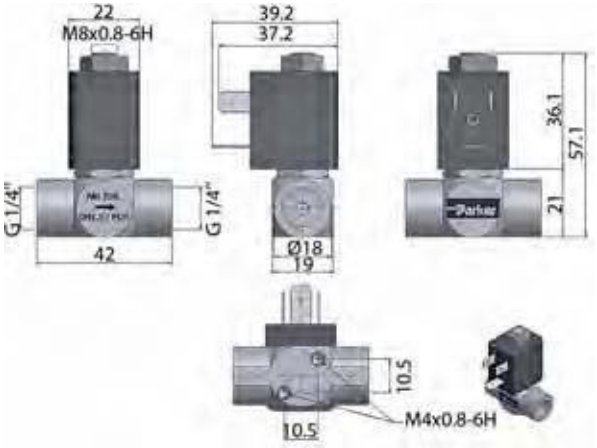

Drawing 075

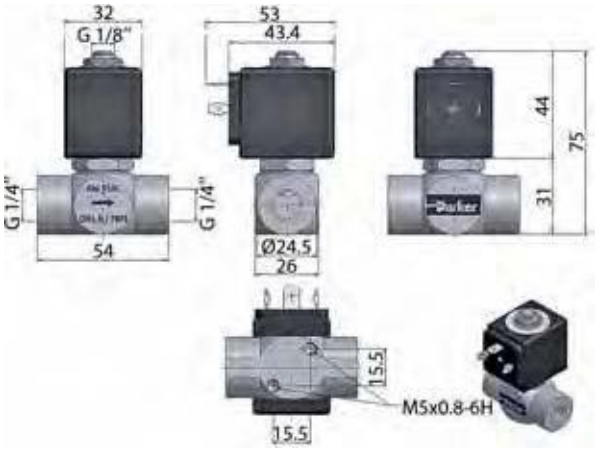

Drawing 076

2/2 HIGH CORROSION RESISTANT VALVES (316L STAINLESS STEEL)
DIRECT OPERATED

316L STAINLESS ST.
PIPE MOUNTING
NORMALLY CLOSED

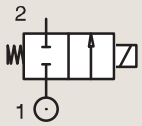

Port size	Orifice Ø	Flow factors			Operating Pressure Differential			Fluid Temp.		Seat Seal	Parker Valves			Power		Coil Group	Dwg. No.
					Min	Max(MOPD)		Min	Max		Valve Ref.	Housing Ref.	Coil Ref.				
BSP	mm	Kv l/min	KV m³/h	Qn l/min	bar	AC bar	DC bar	°C	°C					AC W	DC W		
3/8"	5	11	0.66	-	0	3	3	-10	140	FKM	201LG3SVG7	-	481865	8	9	2.0	077
	5	11	0.66	-	0	4	4	-10	140	FKM	201LG3SVG7	-	491514	13	16	2.0	077
	6.2	13	0.78	-	0	2	2	-10	140	FKM	201LG3UVG7	-	481865	8	9	2.0	077
	6.2	13	0.78	-	0	2	3	-10	140	FKM	201LG3UVG7	-	491514	13	16	2.0	077
1/2"	5	11	0.66	-	0	3	3	-10	140	FKM	201LG4SVG7	-	481865	8	9	2.0	078
	5	11	0.66	-	0	4	4	-10	140	FKM	201LG4SVG7	-	491514	13	16	2.0	078
	6.2	13	0.78	-	0	2	2	-10	140	FKM	201LG4UVG7	-	481865	8	9	2.0	078
	6.2	13	0.78	-	0	2	3	-10	140	FKM	201LG4UVG7	-	491514	13	16	2.0	078

For this page	Port size	Orifice (mm)	Kv (l/min)	MOPD (bar)	Fluid Temp (°C)	Amb Temp (°C)
From	3/8"	5	11	2	-10	-10
To	1/2"	6.2	13	4	140	50

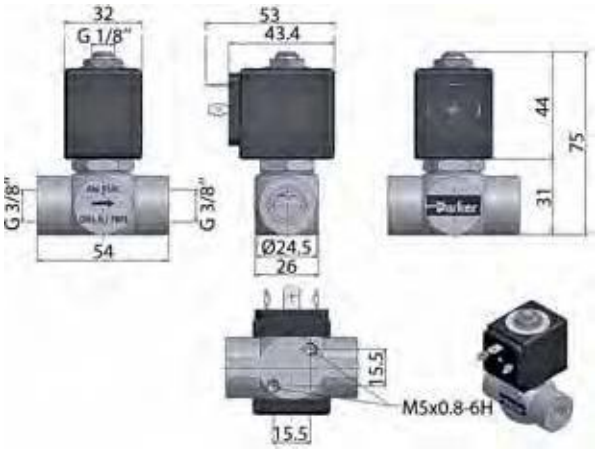

Drawing 077

Drawing 078

2/2 HIGH CORROSION RESISTANT VALVES (316L STAINLESS STEEL)
DIRECT OPERATED

316L STAINLESS ST.
PIPE MOUNTING
NORMALLY CLOSED

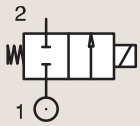

Port size	Orifice Ø	Flow factors			Operating Pressure Differential			Fluid Temp.		Seat Seal	Parker LUCIFER® Valves			IS	Power		Coil Group	Dwg. No.
					Min	Max(MOPD)		Min	Max									
	mm	Kv l/min	KV m³/h	Qn l/min	bar	AC bar	DC bar	°C	°C		Valve Ref.	Housing Ref.	Coil Ref.		AC W	DC W		
1/4" NPT	1	0.6	0.036	40	0	-	98	-40	75	PUR	U121V5595 [1]	-	492210		-	1.8	9.0/10.1	6713
	1	0.6	0.036	40	0	-	98	-40	75	PUR	U121V5595 [1]	-	496565	*	-	0.3	9.0/10.1	6713
	1	0.6	0.036	40	0	98	98	-40	75	PUR	U121V5595 [1]	-	496800		8	8	9.0/10.1	6713
	1	0.6	0.036	40	0	98	98	-40	75	PUR	U121V5595 [1]	-	496895		8	8	9.0/10.1	6713
	1	0.6	0.036	40	0	98	98	-40	75	PUR	U121V5596 [1]	-	492310		6	6	10.1	6713
	1	0.6	0.036	40	0	98	98	-40	75	PUR	U121V5596 [1]	-	496560		8	8	10.1	6713
	1	0.6	0.036	40	0	98	98	-40	75	PUR	U121V5596 [1]	-	496800		8	8	10.1	6713
	1	-	-	40	0	98	98	-10	75	PUR	U121V55961D [1]	-	483270		8	8	11.0	6714
	1	-	-	40	0	98	98	-10	75	PUR	U121V55961D [1]	-	483270.02		8	8	11.0	6714

Notes:

1. Valve delivered with an individual material traceability certificate (3.1 following EN10204)

For this page	Port size	Orifice (mm)	Kv (l/min)	MOPD (bar)	Fluid Temp (°C)	Amb Temp (°C)
From	1/4"	1	-	98	-40	-40
To	1/4"	1	0.6	98	75	50

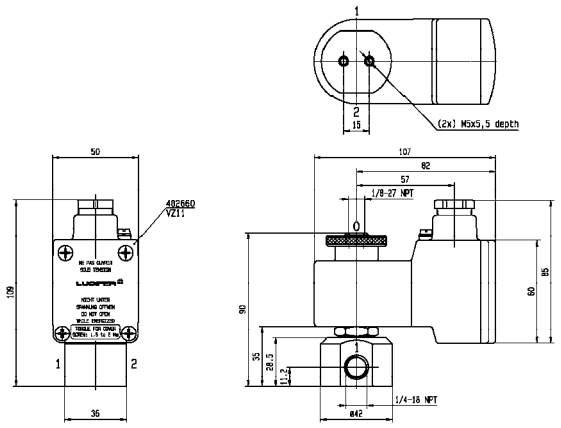

Drawing 6713

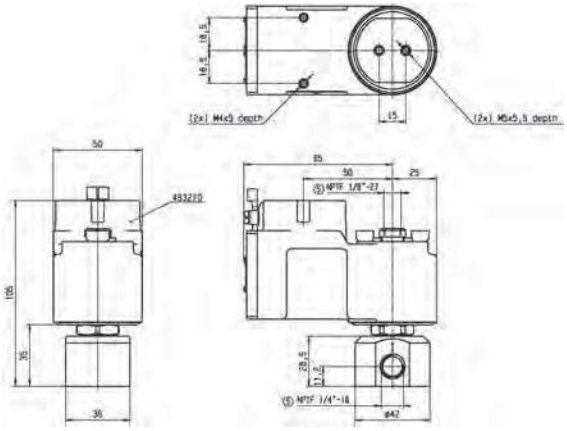

Drawing 6714

2/2 HIGH CORROSION RESISTANT VALVES (316L STAINLESS STEEL) MAGNALIFT

Commercial Equipment

Medical / Instrumentation

Industrial Equipment

316L STAINLESS ST. PIPE MOUNTING

NORMALLY CLOSED

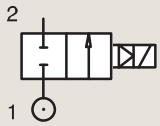

Port size	Orifice Ø	Flow factors			Operating Pressure Differential			Fluid Temp.		Seat Seal	Parker Valves			Power		Coil Group	Dwg. No.
					Min	Max(MOPD)		Min	Max								
BSP	mm	Kv l/min	KV m³/h	Qn l/min	bar	AC bar	DC bar	°C	°C		Valve Ref.	Housing Ref.	Coil Ref.	AC W	DC W		
3/8"	15	40	2.4	-	0	10	-	-10	85	EPDM	221S10E	2995	481865	8	-	2.0	067
	15	40	2.4	-	0	10	7	-10	140	EPDM	221S10E [1]	4270	486265	14	14	2.0	067
	15	40	2.4	-	0	10	-	-10	85	FKM	221S10F	2995	481865	8	-	2.0	067
	15	40	2.4	-	0	10	7	-10	85	FKM	221S10F [1]	4270	486265	14	14	2.0	067
1/2"	15	50	3	-	0	10	-	-10	85	EPDM	221S15E	2995	481865	8	-	2.0	068
	15	50	3	-	0	10	7	-10	140	EPDM	221S15E [1]	4270	486265	14	14	2.0	068
	15	50	3	-	0	10	-	-10	85	FKM	221S15F	2995	481865	8	-	2.0	068
	15	50	3	-	0	10	7	-10	85	FKM	221S15F [1]	4270	486265	14	14	2.0	068
3/4"	24	95	5.7	-	0	10	-	-10	85	EPDM	221S20E	2995	481865	8	-	2.0	069
	24	95	5.7	-	0	10	7	-10	140	EPDM	221S20E [1]	4270	486265	14	14	2.0	069
	24	95	5.7	-	0	10	-	-10	85	FKM	221S20F	2995	481865	8	-	2.0	069
	24	95	5.7	-	0	10	7	-10	85	FKM	221S20F [1]	4270	486265	14	14	2.0	069

Notes:

1. Maximum pressure for steam: 4 Bar (140°C)

For this page	Port size	Orifice (mm)	Kv (l/min)	MOPD (bar)	Fluid Temp (°C)	Amb Temp (°C)
From	3/8"	15	40	7	-10	-10
To	3/4"	24	95	10	140	50

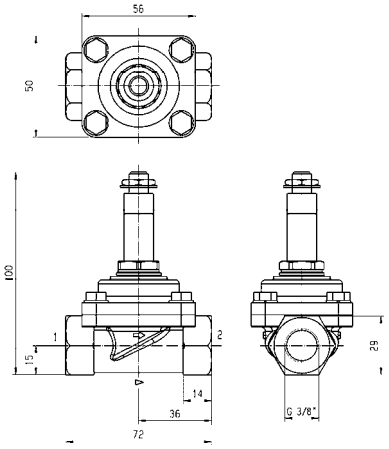

Drawing 067

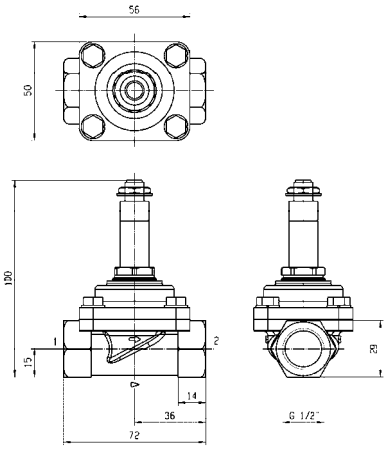

Drawing 068

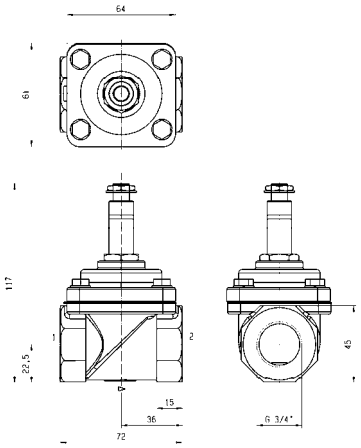

Drawing 069

2/2 HIGH CORROSION RESISTANT VALVES (316L STAINLESS STEEL) MAGNALIFT

316L STAINLESS ST. PIPE MOUNTING

NORMALLY CLOSED

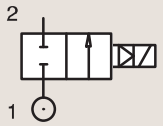

Port size	Orifice Ø	Flow factors			Operating Pressure Differential			Fluid Temp.		Seat Seal	Parker Valves			Power		Coil Group	Dwg. No.
					Min	Max(MOPD)		Min	Max								
BSP	mm	Kv l/min	KV m³/h	Qn l/min	bar	AC bar	DC bar	°C	°C		Valve Ref.	Housing Ref.	Coil Ref.	AC W	DC W		
1"	24	105	6.3	-	0	10	-	-10	85	EPDM	**221S25E**	**2995**	**481865**	8	-	2.0	070
	24	105	6.3	-	0	10	7	-10	140	EPDM	**221S25E** [1]	**4270**	**486265**	14	14	2.0	070
	24	105	6.3	-	0	10	-	-10	85	FKM	**221S25F**	**2995**	**481865**	8	-	2.0	070
	24	105	6.3	-	0	10	7	-10	85	FKM	**221S25F** [1]	**4270**	**486265**	14	14	2.0	070

Notes:

1. Maximum pressure for steam: 4 Bar (140°C)

For this page	Port size	Orifice (mm)	Kv (l/min)	MOPD (bar)	Fluid Temp (°C)	Amb Temp (°C)
From	1"	24	105	7	-10	-10
To	1"	24	105	10	140	50

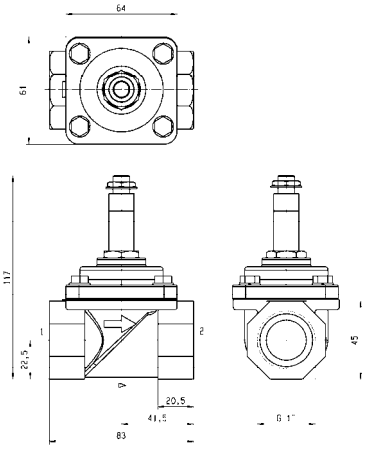

Drawing 070

2 WAY VALVES

VALVES FOR BEVERAGE DISPENSING - LIQUIPURE®

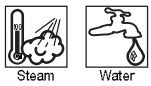

2/2

Actuation	Body	Function	Port Size	Orifice (mm)	Flow Factor Kv(l/min)	MOPD (bar)	Max Fluid Temp. (°C)	Page Parker Valves
Direct Operated	Stainless St./Sub-base mounting	Normally Closed	SB	1.5 to 3	4.2	20	-	202

2/2 VALVES FOR BEVERAGE DISPENSING - LIQUIPURE®
DIRECT OPERATED

Beverage Dispensing

Medical / Instrumentation

STAINLESS ST. SUB-BASE MOUNTING

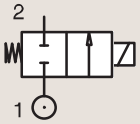

NORMALLY CLOSED

Port size	Orifice Ø	Flow factors			Operating Pressure Differential			Fluid Temp.		Seat Seal	Parker Valves			Power		Coil Group	Dwg. No.
					Min	Max(MOPD)		Min	Max		Valve Ref.	Housing Ref.	Coil Ref.				
	mm	Kv l/min	KV m³/h	Qn l/min	bar	AC bar	DC bar	°C	°C					AC W	DC W		
SB	1.5	1.3	0.08	-	0	20	20	-10	140	Ruby	2019F1GRG7	-	D4	13	16	24.0	071
	1.5	1.3	0.08	-	0	20	20	-10	140	Ruby	2019F1GRG7	-	D5	8	9	24.0	071
	1.5	1.3	0.08	-	0	20	20	-10	140	Ruby	2019F1GRG7	-	LA	9	9	24.0	071
	1.5	1.3	0.08	-	0	20	20	-10	140	Ruby	2019F1GRG7	-	LB-LC	13	16	24.0	071
	1.5	1.3	0.08	-	0	20	-	-10	140	Ruby	2019F1GRG7	-	XS03	9	-	24.0	071
	1.5	1.3	0.08	-	0	20	20	-10	140	FDA FKM	2019F1GVG7	-	D4	13	16	24.0	071
	1.5	1.3	0.08	-	0	20	20	-10	140	FDA FKM	2019F1GVG7	-	D5	8	9	24.0	071
	1.5	1.3	0.08	-	0	20	20	-10	140	FDA FKM	2019F1GVG7	-	LA	9	9	24.0	071
	1.5	1.3	0.08	-	0	20	20	-10	140	FDA FKM	2019F1GVG7	-	LB-LC	13	16	24.0	071
	1.5	1.3	0.08	-	0	20	-	-10	140	FDA FKM	2019F1GVG7	-	XS03	9	-	24.0	071
	2	2.3	0.14	-	0	15	15	-10	140	Ruby	2019F1JRG7	-	D4	13	16	24.0	071
	2	2.3	0.14	-	0	15	15	-10	140	Ruby	2019F1JRG7	-	D5	8	9	24.0	071
	2	2.3	0.14	-	0	15	15	-10	140	Ruby	2019F1JRG7	-	LA	9	9	24.0	071
	2	2.3	0.14	-	0	15	15	-10	140	Ruby	2019F1JRG7	-	LB-LC	13	16	24.0	071
	2	2.3	0.14	-	0	15	-	-10	140	Ruby	2019F1JRG7	-	XS03	9	-	24.0	071
	2	2.3	0.14	-	0	15	15	-10	140	FDA FKM	2019F1JVG7	-	D4	13	16	24.0	071
	2	2.3	0.14	-	0	15	15	-10	140	FDA FKM	2019F1JVG7	-	D5	8	9	24.0	071
	2	2.3	0.14	-	0	15	15	-10	140	FDA FKM	2019F1JVG7	-	LA	9	9	24.0	071
	2	2.3	0.14	-	0	15	15	-10	140	FDA FKM	2019F1JVG7	-	LB-LC	13	16	24.0	071
	2	2.3	0.14	-	0	15	-	-10	140	FDA FKM	2019F1JVG7	-	XS03	9	-	24.0	071
	2.5	3.2	0.19	-	0	10	10	-10	140	Ruby	2019F1LRG7	-	D4	13	16	24.0	071
	2.5	3.2	0.19	-	0	10	10	-10	140	Ruby	2019F1LRG7	-	D5	8	9	24.0	071
	2.5	3.2	0.19	-	0	10	10	-10	140	Ruby	2019F1LRG7	-	LA	9	9	24.0	071
	2.5	3.2	0.19	-	0	10	10	-10	140	Ruby	2019F1LRG7	-	LB-LC	13	16	24.0	071

For this page	Port size	Orifice (mm)	Kv (l/min)	MOPD (bar)	Fluid Temp (°C)	Amb Temp (°C)
From	SB	1.5	1.3	10	-10	-10
To	SB	2.5	3.2	20	140	50

Drawing 071

2/2 VALVES FOR BEVERAGE DISPENSING - LIQUIPURE®
DIRECT OPERATED

STAINLESS ST.
SUB-BASE MOUNTING
NORMALLY CLOSED

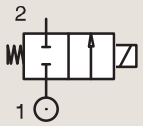

Port size	Orifice Ø	Flow factors			Operating Pressure Differential			Fluid Temp.		Seat Seal	Parker Valves			Power		Coil Group	Dwg. No.
					Min	Max(MOPD)		Min	Max		Valve Ref.	Housing Ref.	Coil Ref.				
	mm	Kv l/min	KV m³/h	Qn l/min	bar	AC bar	DC bar	°C	°C					AC W	DC W		
SB	2.5	3.2	0.19	-	0	10	-	-10	140	Ruby	2019F1LRG7	-	XS03	9	-	24.0	071
	2.5	3.2	0.19	-	0	10	10	-10	140	FDA FKM	2019F1LVG7	-	D4	13	16	24.0	071
	2.5	3.2	0.19	-	0	10	10	-10	140	FDA FKM	2019F1LVG7	-	D5	8	9	24.0	071
	2.5	3.2	0.19	-	0	10	10	-10	140	FDA FKM	2019F1LVG7	-	LA	9	9	24.0	071
	2.5	3.2	0.19	-	0	10	10	-10	140	FDA FKM	2019F1LVG7	-	LB-LC	13	16	24.0	071
	2.5	3.2	0.19	-	0	10	-	-10	140	FDA FKM	2019F1LVG7	-	XS03	9	-	24.0	071
	3	4.2	0.25	-	0	7	7	-10	140	Ruby	2019F1NRG7	-	D4	13	16	24.0	071
	3	4.2	0.25	-	0	7	7	-10	140	Ruby	2019F1NRG7	-	D5	8	9	24.0	071
	3	4.2	0.25	-	0	7	7	-10	140	Ruby	2019F1NRG7	-	LA	9	9	24.0	071
	3	4.2	0.25	-	0	7	7	-10	140	Ruby	2019F1NRG7	-	LB-LC	13	16	24.0	071
	3	4.2	0.25	-	0	7	-	-10	140	Ruby	2019F1NRG7	-	XS03	9	-	24.0	071
	3	4.2	0.25	-	0	7	7	-10	140	FDA FKM	2019F1NVG7	-	D4	13	16	24.0	071
	3	4.2	0.25	-	0	7	7	-10	140	FDA FKM	2019F1NVG7	-	D5	8	9	24.0	071
	3	4.2	0.25	-	0	7	7	-10	140	FDA FKM	2019F1NVG7	-	LA	9	9	24.0	071
	3	4.2	0.25	-	0	7	7	-10	140	FDA FKM	2019F1NVG7	-	LB-LC	13	16	24.0	071
	3	4.2	0.25	-	0	7	-	-10	140	FDA FKM	2019F1NVG7	-	XS03	9	-	24.0	071

For this page	Port size	Orifice (mm)	Kv (l/min)	MOPD (bar)	Fluid Temp (°C)	Amb Temp (°C)
From	SB	2.5	3.2	7	-10	-10
To	SB	3	4.2	10	140	50

Drawing 071