* VCD® = Voice Coil Drive technology

Content03.INDD RH 29.08.2013

Introduction: Proportional DC Valves

Proportional valves and servo proportional valves are characterized by a number of design features that determine their quality to fit into different applications. The main features are listed below.

Solenoid drive (proportional valves):
Solenoids operate unidirectionally against a spring, provide high force and are - because of high inductance - limited in their dynamics.

Voice Coil Drive® :
A moving coil in the field of a static permanent magnet operates bi-directionally. Springs are only needed to ensure the power-down position. The low inductance allows highest dynamics.

External electronics:
Valves without integrated electronics are less sensitive to vibration and high temperature. LVDTs always include integrated electronics.

Integrated electronics (onboard electronics - OBE):
Onboard electronics simplifies the installation and improves the repeatability from valve to valve.

LVDT (spool position feedback):
Closed loop control of the spool position improves the sensitivity and accuracy.

Direct operated (d.o.):
High hydraulic output can be achieved with low electric power input.

Pilot operated (p.o.):
Beyond the functional limits of direct operated valves hydraulic amplification is required.

Positive spool overlap:
To avoid load drifting in the zero position, spools with positive overlap are used.

Zero lap spools:
In closed loop circuits zero lap spools are used for an effective control of the spool at low position errors.

Spool/Sleeve design:
For minimal hysteresis, high precision, and better wear resistance, the spool/sleeve design is preferred over the spool/body design.

Regenerative Valves:
In applications with differential cylinders it is common to feed the return flow from the rod side of the cylinder back to the piston side to achieve higher velocity or lower pump flow. Parker differentiates between regeneration to the pressure level of the pump (P-regeneration) or directly to the piston area respectively the A-port of the valve (A-regeneration). The Parker regenerative valves use the advantageous A-regeneration.

Hybrid Valves:
Regenerative valves with an integrated solenoid valve - to switch to the standard mode - are called Hybrid Valves at Parker. The regenerative mode is used for maximum velocity, the standard mode for maximum force.

Regenerative and hybrid valves are also available as on/off directional control valves.

The proportional directional valves D1FB (NG06) are available with and without onboard electronics (OBE).

D1FB OBE:

The digital onboard electronics is situated in a robust metal housing, which allows the usage under rough environmental conditions.

The nominal values are factory set. The cable connection to a serial RS232 interface is available as accessory.

D1FB for external electronics:

The parameters can be saved, changed and duplicated in combination with the digital power amplifier PWD00A-400.

The valve parameters can be edited with the common ProPxD software for both versions.

The D1FB valves can be ordered with spool/sleeve design (D1FB*0) for maximum precision as well as spool/body design (D1FB*3) for high nominal flow - see functional limit curves for maximum flow capability.
Valves with explosion proof solenoids EEx me ll see catalogue HY11-3343.
Download: www.parker.com/euro_hcd - see “Literature”


D1FB


D1FB OBE

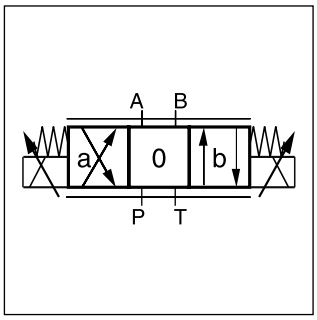

D1FB

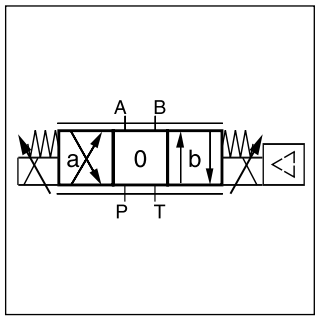

D1FB OBE

Technical Features

- Spool/sleeve and spool/body
- 3 command options for D1FB OBE:
  +/- 10 V, 4…20 mA, +/- 20 mA
- High repeatability from valve to valve
- Low hysteresis
- Manual override
- Digital onboard electronics
- Zero lap spools for the usage of simple closed loop systems

D1FB*0 OBE
Spool/sleeve design

D1FB*3 OBE
Spool/body design

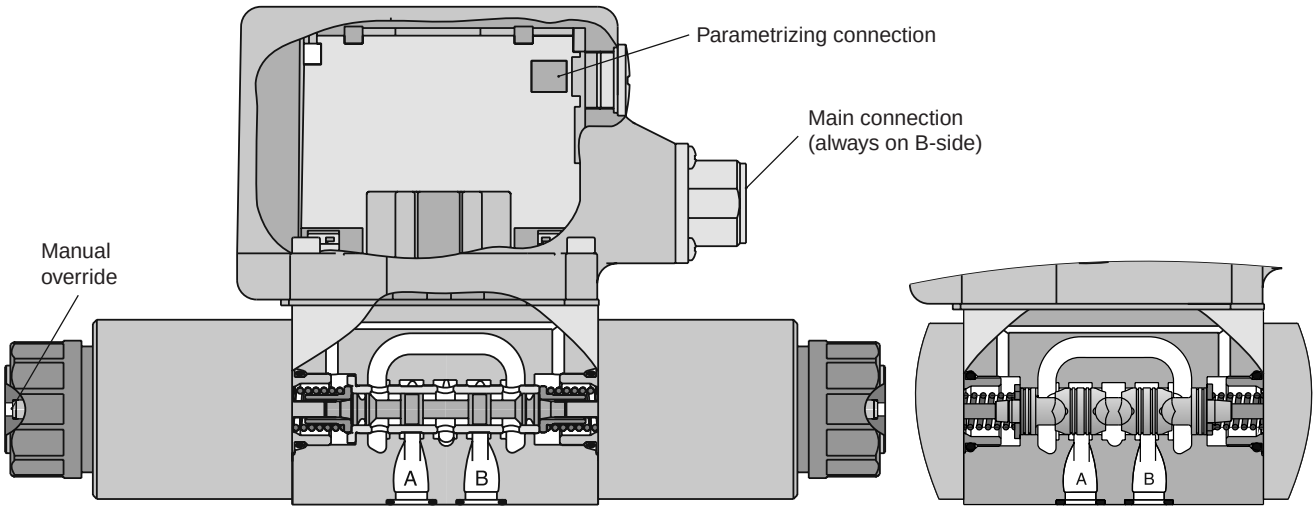

3

D1FB

D	1	F	B			0	N				
Directional control valve	**Size DIN NG06 CETOP 03 NFPA D03**	**Proportional control**	**Standard dynamics standard repeatability**	**Spool type**	**Spool position**		**Seals NBR** (other seal compounds on request)	**Solenoid**	**Connector**	**Design**	**Design series** (not required for ordering)

D1FB*0: Spool/sleeve design		
Overlap		
Code	Spool type	Flow [l/min] at Δp 5 bar per metering edge
E01H **E01F** **E01C**	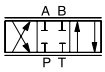	**20** **12** **6**
E02H **E02F** **E02C**		**20** **12** **6**
E03H **E03F** **E03C**		**20** **12** **6**
B31H **B31F**	$Q_B = Q_A/2$ 	**20 / 10** **12 / 6**
B32H **B32F**	$Q_B = Q_A/2$ 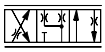	**20 / 10** **12 / 6**
Zero lap [1]		
Code	Spool type	Flow [l/min] at Δp 35 bar per metering edge
E50H **E50F** **E50C**		**20** **12** **6**
B60H **B60F**	$Q_B = Q_A/2$ 	**20 / 10** **12 / 6**

D1FB*3: Spool/body design		
Overlap		
Code	Spool type	Flow [l/min] at Δp 5 bar per metering edge
E01K **E01H** **E01F**	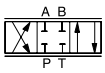	**30** **20** **10**
E02K **E02H** **E02F**	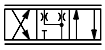	**30** **20** **10**

Code	Design
0	**Spool/sleeve design**
3	**Spool/body design**

Code	Connector
W [2]	**Connector as per EN 175301-803**
J [2][3]	**Connector DT04-2P "Deutsch"**

D1FB*0: Spool/sleeve design	
Code	Solenoid
M	**9 V / 2.7 A**
J	**24 V / 0.8 A**

D1FB*3: Spool/body design	
Code	Solenoid
K	**12 V / 2.2 A**
J	**24 V / 1.1 A**

Code	Design
C	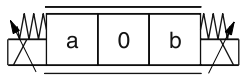
E	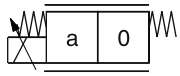
K	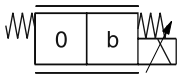

Short delivery time for all variations

[1] Only for spool position code C. No defined spool positioning at power down.
[2] Please order connector separately, see chapter 3 accessories.
[3] Not for spool/sleeve design.

D1FB UK.indd RH 29.08.2013

D1FB OBE (with onboard electronics)

D	1	F	B			0	N				
Directional control valve	**Size DIN NG06 CETOP 03 NFPA D03**	**Proportional control**	**Standard dynamics standard repeatability**	**Spool type**	**Spool position**		**Seals NBR** (other seal compounds on request)	**Input signal**	**Options**	**Design**	**Design series** (not required for ordering)

D1FB*0: Spool/sleeve design		
Overlap		
Code	Spool type	Flow [l/min] at Δp 5 bar per metering edge
E01H **E01F** **E01C**	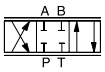	**20** **12** **6**
E02H **E02F** **E02C**		**20** **12** **6**
E03H **E03F** **E03C**		**20** **12** **6**
B31H **B31F**	$Q_B = Q_A/2$ 	**20 / 10** **12 / 6**
B32H **B32F**	$Q_B = Q_A/2$ 	**20 / 10** **12 / 6**
Zero lap [1]		
Code	Spool type	Flow [l/min] at Δp 35 bar per metering edge
E50H **E50F** **E50C**		**20** **12** **6**
B60H **B60F**	$Q_B = Q_A/2$ 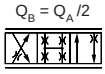	**20 / 10** **12 / 6**

D1FB*3: Spool/body design		
Overlap		
Code	Spool type	Flow [l/min] at Δp 5 bar per metering edge
E01K **E01H** **E01F**	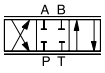	**30** **20** **10**
E02K **E02H** **E02F**		**30** **20** **10**

Code	Input signal [3]	Function	Port	Options
F0	**0...+/-10 V**	**0...+10 V > P-A**	**6 + PE**	**Potentiometer supply**
G0	**0...+/-20 mA**	**0...+20 mA > P-A**	**6 + PE**	**—**
S0	**4...20 mA**	**12...20 mA > P-A**	**6 + PE**	**—**
W5 [2]	**0...+/-10 V** **4...20 mA**	**0...+10 V > P-A** **12...20 mA > P-A**	**11 + PE**	**Command channel & potentiometer supply**

Code	Design
0	**Spool/sleeve design**
3	**Spool/body design**

Code	Design
C	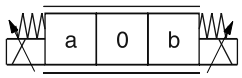
E	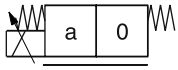
K	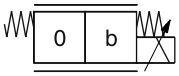

Short delivery time for all variations

Please order connector separately, see chapter 3 accessories.
Parametrizing cable OBE → RS232: Item no. 40982923

[1] Only for spool position code C. No defined spool positioning at power down.
[2] Factory set ± 10 V on delivery.
[3] Single solenoid always 0...+10 V respectively 4...20 mA.

D1FB UK.indd RH 29.08.2013

3

General				
Design		Direct operated proportional DC valve		
Actuation		Proportional solenoid		
Size		NG06/CETOP 03/NFPA D03		
Mounting interface		DIN 24340 / ISO 4401 / CETOP RP121 / NFPA		
Mounting position		unrestricted		
Ambient temperature	[°C]	-20...+60		
$MTTF_D$ value (OBE)	[years]	150 (75)		
Weight (OBE)	[kg]	2.2 (2.9)		
Vibration resistance	[g]	10 Sinus 5...2000 Hz acc. IEC 68-2-6 30 Random noise 20...2000 Hz acc. IEC 68-2-36 15 Shock acc. IEC 68-2-27		
Hydraulic				
Max. operating pressure	[bar]	Ports P, A, B 350; Port T 210		
Max. pressure drop PABT / PBAT	[bar]	350		
Fluid		Hydraulic oil as per DIN 51524 ... 51535, other on request		
Fluid temperature	[°C]	-20...+60		
Viscosity permitted recommended	[cSt] / [mm^2/s] [cSt] / [mm^2/s]	20...380 30...80		
Filtration		ISO 4406 (1999) 18/16/13		
Nominal flow at Δp = 5 bar per control edge [1]	[l/min]	**D1FB*0 (Spool/sleeve)** 6 / 12 / 20	**D1FB*3 (Spool/body)** 10 / 20 / 30	
Leakage at 100 bar	[ml/min]	<50 (overlapped spool); <400 (zerolapped spool)	<60	
Overlap	[%]	25, electrically normalized at 10 (see flow characteristics)		
Static / Dynamic				
Step response at 100 % step	[ms]	30	30	
Hysteresis	[%]	<4	<6	
Temperature drift solenoid current	[%/K]	<0.02		
Electrical characteristics				
Duty ratio	[%]	100 ED; CAUTION: Coil temperature up to 150 °C possible		
Protection class		Standard (as per EN 175301-803) IP65 in accordance with EN 60529 (with correctly mounted plug-in connector) DT04-2P “Deutsch“ IP69K (with correctly mounted plug-in connector)		
Solenoid		**Code "M"**	**Code "K"**	**Code "J" (Spool/sleeve)**
Supply voltage	[V]	9	12	24
Current consumption	[A]	2.7	2.2	1.1 (0.8)
Resistance	[Ohm]	2.7	4.4	18.6
Solenoid connection		Connector as per EN 175301-803 (code W), DT04-2P “Deutsch“ connector (code J). Solenoid identification as per ISO 9461.		
Wiring min.	[mm²]	3x1.5 (AWG 16) overall braid shield (Code W), "Deutsch" connector DP4 2-Pin (Code J)		
Wiring lenght max.	[m]	50		

[1] Flow rate for different Δp per control edge: $Q_x = Q_{Nom.} \cdot \sqrt{\frac{\Delta p_x}{\Delta p_{Nom.}}}$

Electrical characteristics OBE		
Duty ratio	[%]	100 ED; CAUTION: Coil temperature up to 150 °C possible
Protection class		IP65 in accordance with EN 60529 (with correctly mounted plug-in connector)
Supply voltage/ripple DC	[V]	18...30, ripple < 5 % eff., surge free
Current consumption max.	[A]	2.0
Pre fusing medium lag	[A]	2.5
Input signal		
Codes F0 & W5 voltage	[V]	+10...0...-10, ripple < 0.01 % eff., surge free, Ri = 100 kOhm, 0...+10 V ⇒ P -> A
Codes S0 & W5 current	[mA]	4...12...20, ripple < 0.01 % eff., surge free, Ri = 200 Ohm, 12...20 mA ⇒ P -> A < 3.6 mA = enable off, > 3.8 mA = enable on (acc. to NAMUR NE43)
Code G0	[mA]	+20...0...-20, ripple < 0.01 % eff., surge free, Ri = 200 Ohm, 0...+20 mA ⇒ P -> A
Differential input max.		
Codes F0, G0 & S0	[V]	30 for terminal D and E against PE (terminal G) 11 for terminal D and E against 0V (terminal B)
Code W5	[V]	30 for terminal 4 and 5 against PE (terminal PE) 11 for terminal 4 and 5 against 0V (terminal 2)
Channel recall signal	[V]	0...2.5: off / 5...30: on / Ri = 100 kOhm
Adjustment ranges Min	[%]	0...50
Max	[%]	50...100
Ramp	[s]	0...32.5
Interface		RS 232, parametrizing connection 5pole
EMC		EN 61000-6-2, EN 61000-6-4
Central connection		
Codes F0, G0 & S0		6 + PE acc. to EN 175201-804
Code W5		11 + PE acc. to EN 175201-804
Wiring min.		
Codes F0, G0 & S0	[mm²]	7 x 1.0 (AWG16) overall braid shield
Code W5	[mm²]	11 x 1.0 (AWG16) overall braid shield
Wiring length max.		50

3

3

Flow characteristics

D1FB*0

at Δp = 5 bar per metering edge
Spool type E01/02/03, B31/32

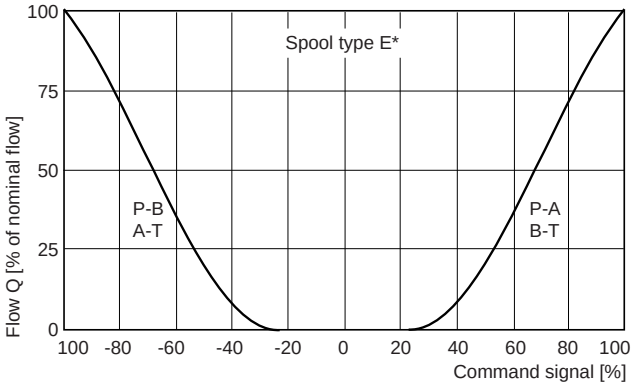

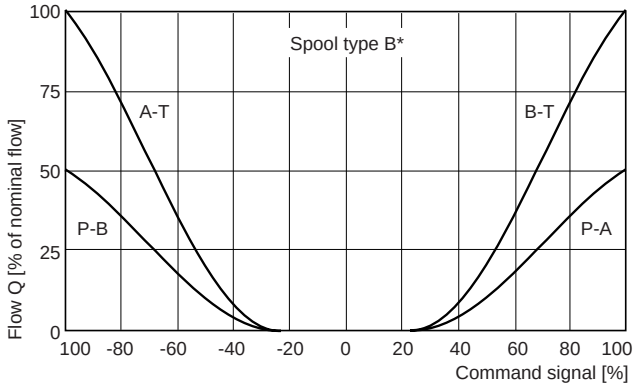

D1FB*0 OBE

(electrically set to opening point 10 %)
at Δp = 5 bar per metering edge
Spool type E01/02/03, B31/32

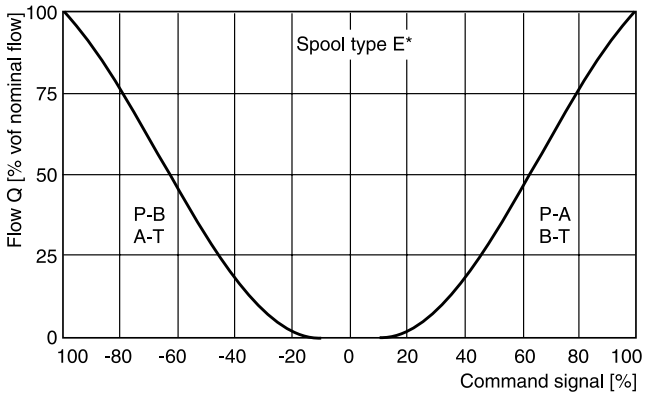

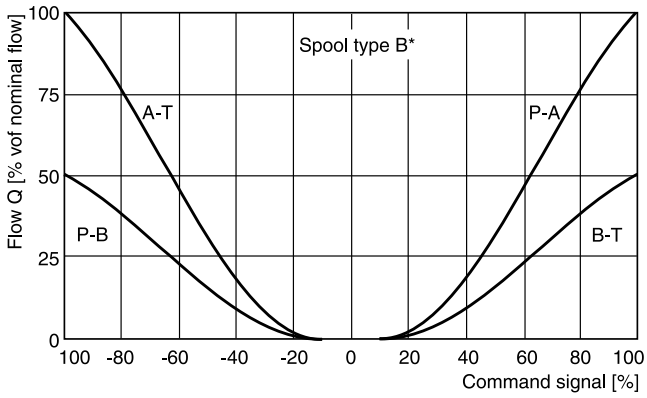

Functional limits

at 25 %, 50 %, 75 % and 100 % command signal (symmetric flow)

At asymmetric flow a reduced flow limit has to be considered – typically approx. 10 % lower.

Spool type E01H

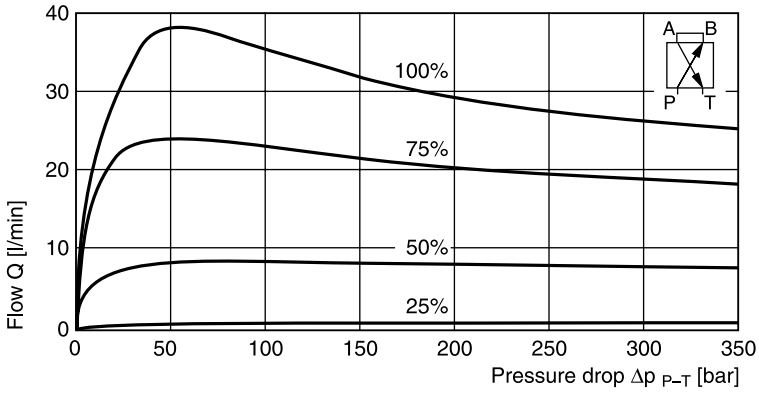

All characteristic curves measured with HLP46 at 50 °C.

Flow characteristics
D1FB*3
at Δp = 5 bar per metering edge
Spool type E01/02

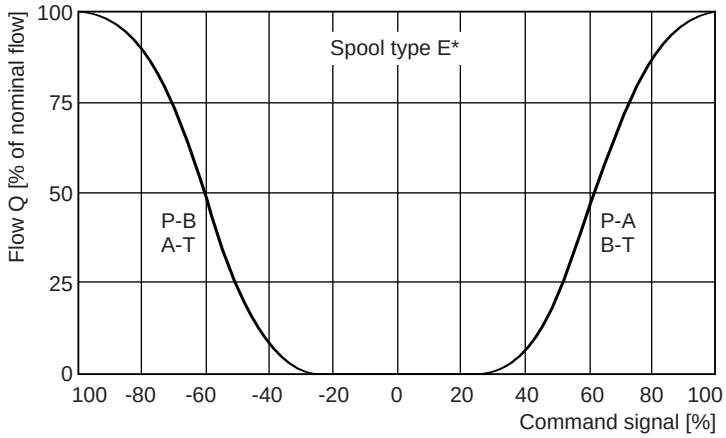

D1FB*3 OBE
(Electrically set to opening point 10 %)
at Δp = 5 bar per metering edge
Spool type E01/02

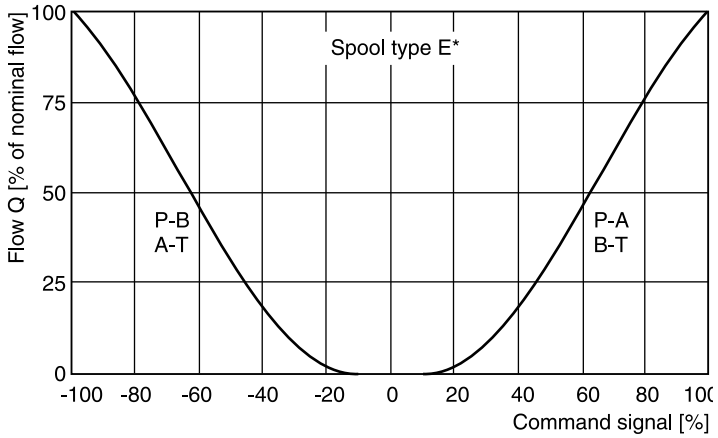

Functional limits
at 25 %, 50 %, 75 % and 100 % command signal (symmetric flow)

At asymmetric flow a reduced flow limit has to be considered – typically approx. 10 % lower.

Spool type E01K

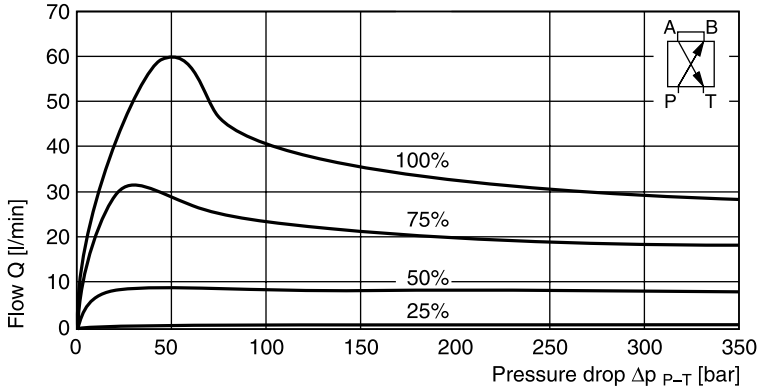

All characteristic curves measured with HLP46 at 50 °C.

3

Code F0
6 + PE acc. to EN 175201-804

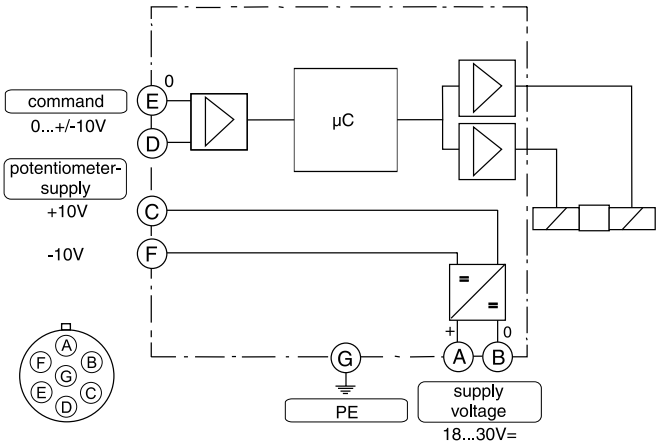

Code G0, S0
6 + PE acc. to EN 175201-804

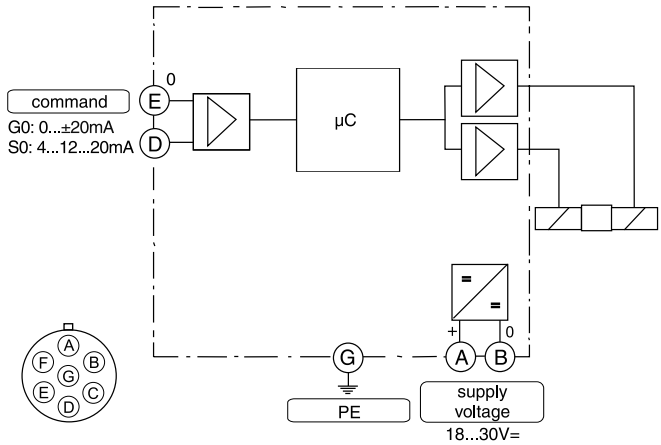

Code W5
11 + PE acc. to EN 175201-804

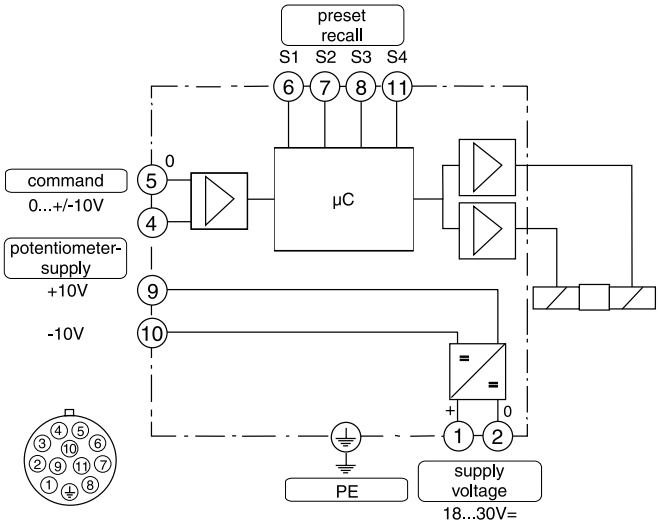

ProPxD interface program

The ProPxD software permits comfortable parameter setting for the module electronics. Via the clearly arranged entry mask the parameters can be noticed and modified. Storage of complete parameter sets is possible as well as printout or record as a text file for further documentation. Stored parameter sets may be loaded anytime and transmitted to other valves. Inside the electronics a non-volatile memory stores the data with the option for recalling or modification.

The PC software can be downloaded free of charge at www.parker.com/euro_hcd – see page “Support".

Features

- Comfortable editing of all parameters
- Depiction and documentation of parameter sets
- Storage and loading of optimized parameter adjustments
- Executable with all actual Windows® operating systems from Windows® 95 upwards
- Plain communication between PC and electronics via serial interface RS-232

The parametrizing cable may be ordered under item no.40982923.

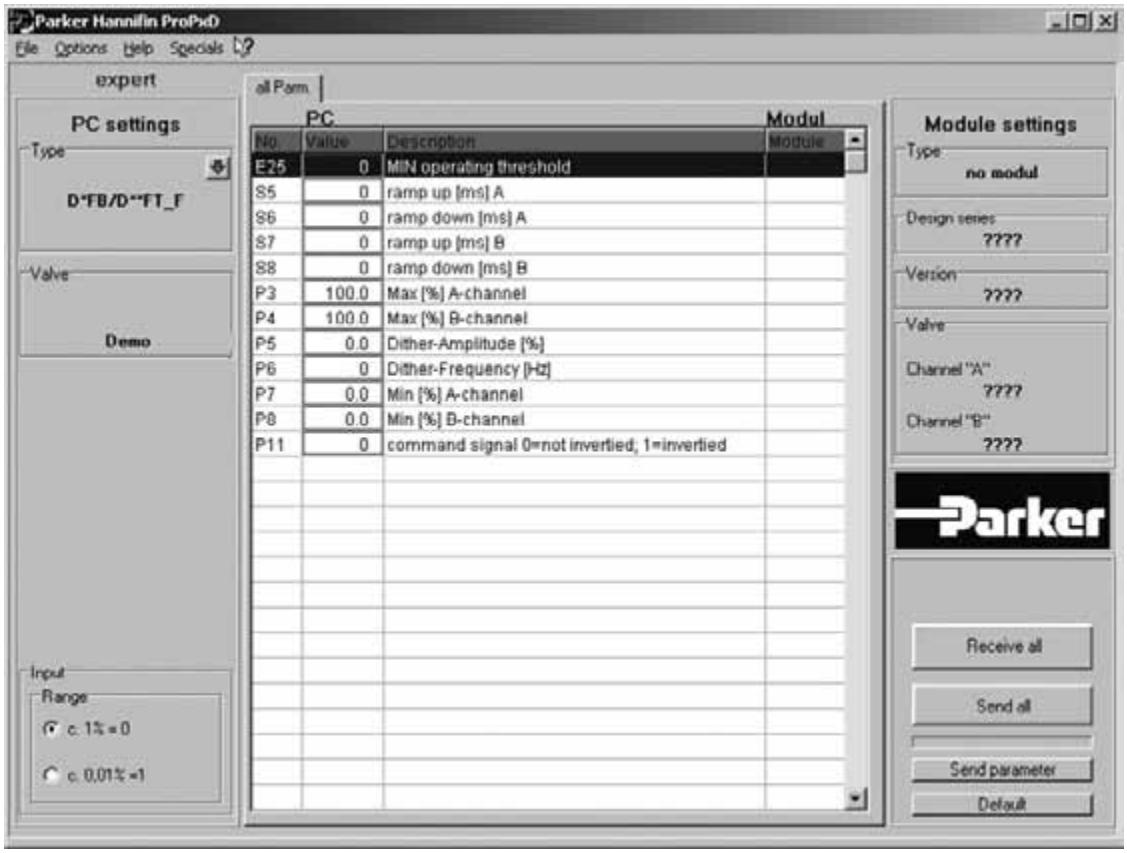

3

D1FB*C

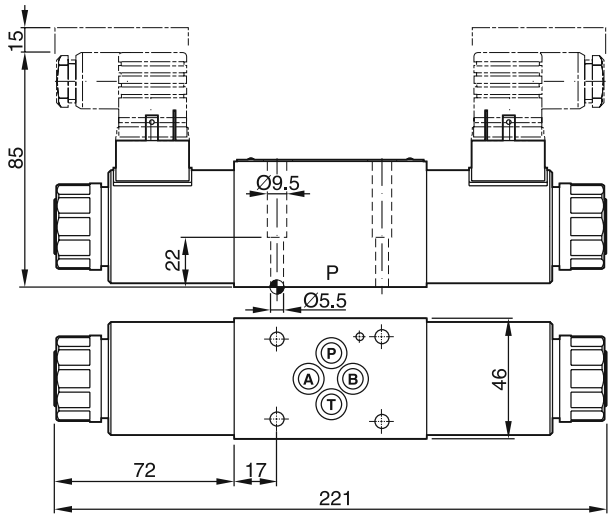

D1FB*E

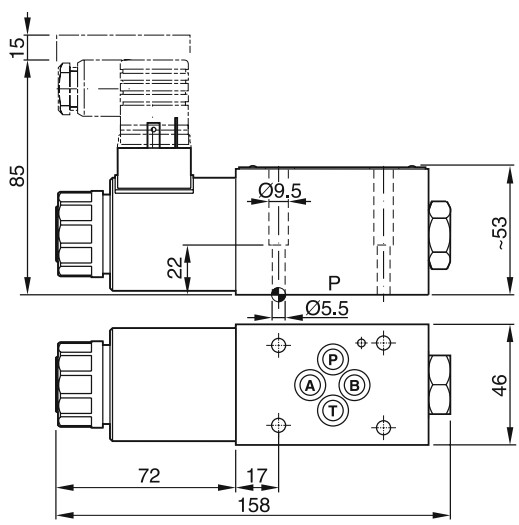

D1FB*K

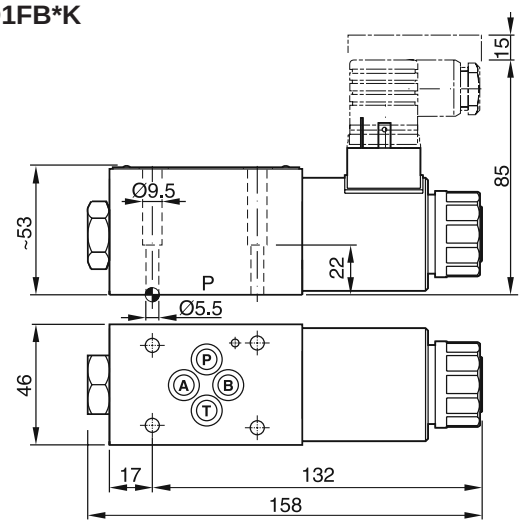

D1FB*C*0 with DT04-2P "Deutsch" connector
(only C style shown)

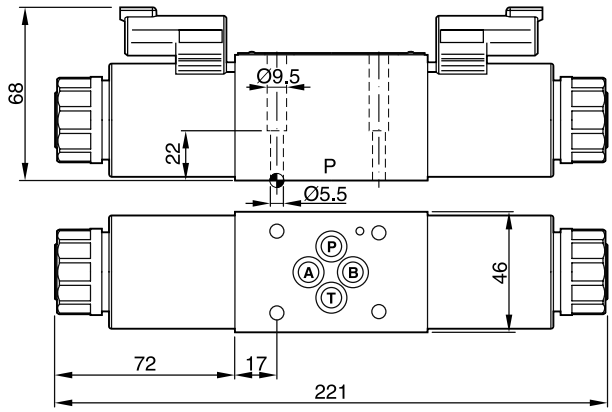

D1FB*C*3

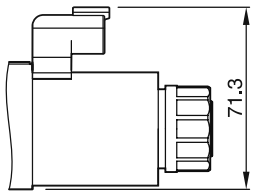

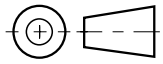

Surface finish	Kit			Kit NBR
R_{max}6.3 ▱ 0.01/100	BK375	4x M5x30 ISO 4762-12.9	7.6 Nm ±15 %	SK-D1FB

D1FB UK.indd RH 29.08.2013

D1FB*C OBE

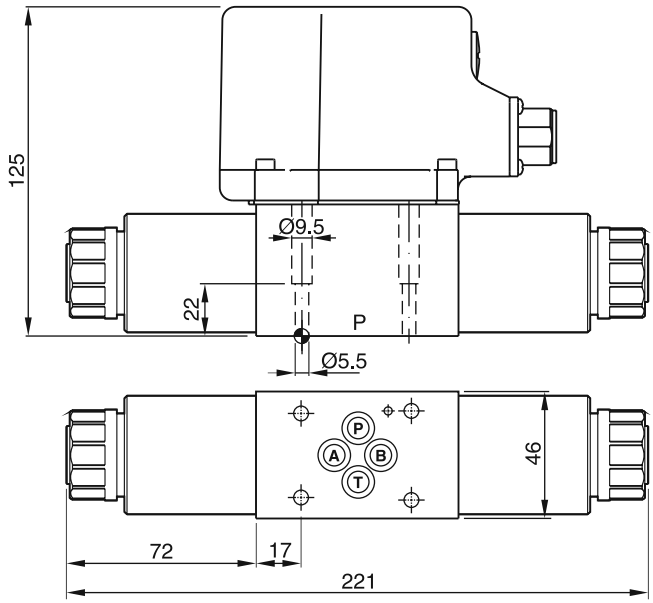

D1FB*E OBE

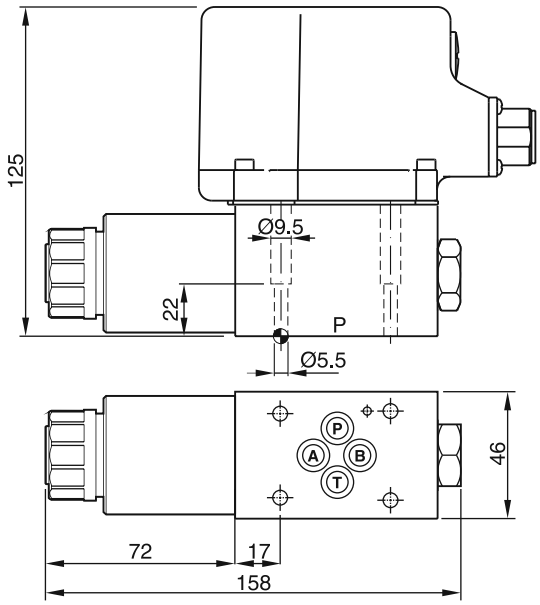

D1FB*K OBE

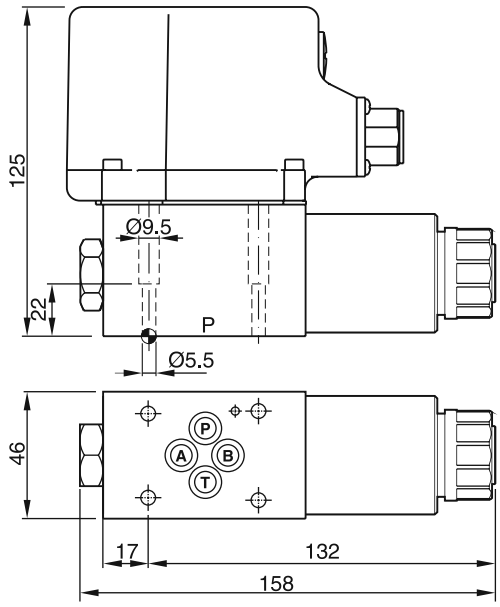

Surface finish	Kit			Kit NBR
R_{max}6.3 ▱ 0.01/100	BK375	4x M5x30 ISO 4762-12.9	7.6 Nm ±15 %	SK-D1FB

D1FB UK.indd RH 29.08.2013

3

The proportional directional valves D3FB (NG10) are available with and without onboard electronics (OBE).

D3FB OBE:

The digital onboard electronics is situated in a robust metal housing, which allows the usage under rough environmental conditions.

The nominal values are factory set. The cable connection to a serial RS232 interface is available as accessory.

D3FB for external electronics:

The parameters can be saved, changed and duplicated in combination with the digital power amplifier PWD00A-400.

The valve parameters can be edited with the common ProPxD software for both versions.

The D3FB valves can be ordered with spool/sleeve design (D3FB*0) for maximum precision as well as spool/body design (D3FB*3) for high nominal flow - see functional limit curves for maximum flow capability.

D3FB

D3FB OBE

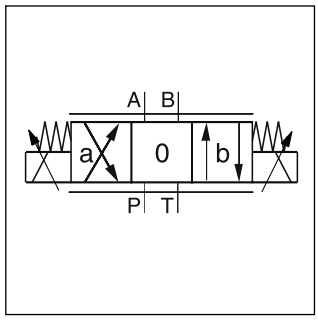

D3FB

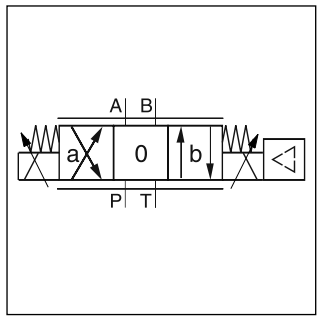

D3FB OBE

Technical Features

- Spool/sleeve and spool/body
- 3 command options for D3FB OBE:
  +/- 10 V, 4…20 mA, +/- 20 mA
- High repeatability from valve to valve
- Low hysteresis
- Manual override
- Digital onboard electronics

D3FB*0 OBE
Spool/sleeve design

D3FB*3 OBE
Spool/body design

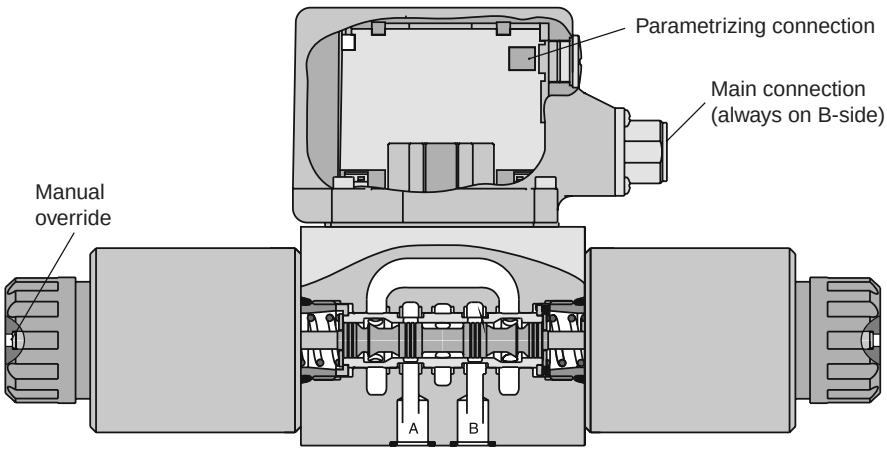

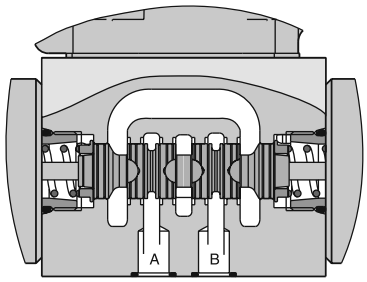

D3FB

D	3	F	B			0	N		W		
DC valve	**Size DIN NG10 CETOP 05 NFPA D05**	**Propor-tional control**	**Standard dynamics standard repeatability**	**Spool type**	**Spool position**		**Seal NBR** (other seal compounds on request)	**Solenoid**	**Connector as per EN 175301-803 without plug** [1]	**Design**	**Design series** (not required for ordering)

D3FB*0: Spool/sleeve design		
Code	Spool type	Flow [l/min] at Δp 5 bar per metering edge
E01M **E01S**	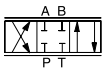	**40** **60**
E02M **E02S**		**40** **60**
B31M **B31S**	$Q_B = Q_A/2$ 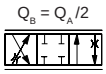	**40 / 20** **60 / 30**
B32M **B32S**	$Q_B = Q_A/2$ 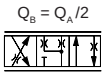	**40 / 20** **60 / 30**

D3FB*3: Spool/body design		
Code	Spool type	Flow [l/min] at Δp 5 bar per metering edge
E01M **E01S** **E01U**	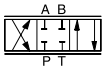	**40** **60** **80**
E02M **E02S** **E02U**		**40** **60** **80**

Code	Design
0	**Spool/sleeve design**
3	**Spool/body design**

D3FB*0: Spool/sleeve design	
Code	Solenoid
K	**12 V / 2.95 A**

D3FB*3: Spool/body design	
Code	Solenoid
K	**12 V / 2.95 A**
J	**24 V / 1.5 A**

Code	Design
C	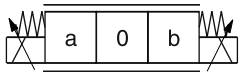
E	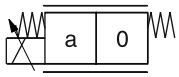
K	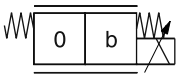

Short delivery time for all variations

For regenerative and hybrid function refer solution with sandwich and adaptor plates "A10-1664 / A10-1665L / H10-1662 / H10-1666L" in chapter 12.

[1] Please order connector separately, see chapter 3 accessories.

3

D3FB OBE (with onboard electronics)

D	3	F	B			0	N				
Directional control valve	**Size DIN NG10 CETOP 05 NFPA D05**	**Proportional control**	**Standard dynamics standard repeatability**	**Spool type**	**Spool position**		**Seals NBR** (other seal compounds on request)	**Input signal**	**Options**	**Design**	**Design series** (not required for ordering)

D3FB*0: Spool/sleeve design		
Code	Spool type	Flow [l/min] at Δp 5 bar per metering edge
E01M **E01S**	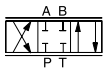	**40** **60**
E02M **E02S**		**40** **60**
B31M **B31S**	$Q_B = Q_A/2$ 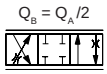	**40 / 20** **60 / 30**
B32M **B32S**	$Q_B = Q_A/2$ 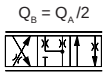	**40 / 20** **60 / 30**

D3FB*3: Spool/body design		
Code	Spool type	Flow [l/min] at Δp 5 bar per metering edge
E01M **E01S** **E01U**	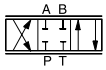	**40** **60** **80**
E02M **E02S** **E02U**		**40** **60** **80**

Code	Design
0	**Spool/sleeve design**
3	**Spool/body design**

Code	Input signal [1]	Function	Port	Options
F0	**0...+/-10 V**	**0...+10 V > P-A**	**6 + PE**	**Potentiometer supply**
G0	**0...+/-20 mA**	**0...+20 mA > P-A**	**6 + PE**	**—**
S0	**4...20 mA**	**12...20 mA > P-A**	**6 + PE**	**—**
W5 [2]	**0...+/-10 V** **4...20 mA**	**0...+10 V > P-A** **12...20 mA > P-A**	**11 + PE**	**Command channel & potentiometer supply**

Code	Design
C	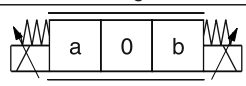
E	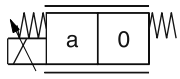
K	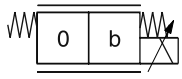

Short delivery time for all variations

For regenerative and hybrid function refer solution with sandwich and adaptor plates "A10-1664 / A10-1665L / H10-1662 / H10-1666L" in chapter 12.
Please order connector separately, see chapter 3 accessories.
Parametrizing cable OBE → RS232: Item no. 40982923

[1] Single solenoid always 0...+10V respectively 4...20 mA.

[2] Factory set ± 10V on delivery.

D3FB UK.indd RH 29.08.2013

General			
Design		Direct operated proportional DC valve	
Actuation		Proportional solenoid	
Size		NG10 / CETOP 05 / NFPA D05	
Mounting interface		DIN 24340 / ISO 4401 / CETOP RP121 / NFPA	
Mounting position		unrestricted	
Ambient temperature	[°C]	-20...+60	
$MTTF_D$ value (OBE)	[years]	150 (75)	
Weight (OBE)	[kg]	6.5 (7.2)	
Vibration resistance	[g]	10 Sinus 5...2000 Hz acc. IEC 68-2-6 30 Random noise 20...2000 Hz acc. IEC 68-2-36 15 Shock acc. IEC 68-2-27	
Hydraulic			
Max. operating pressure	[bar]	Ports P, A, B 350, T 210	
Max. pressure drop PABT / PBAT	[bar]	350	
Fluid		Hydraulic oil as per DIN 51524 ... 51535, other on request	
Fluid temperature	[°C]	-20...+60	
Viscosity permitted recommended	[cSt] / [mm²/s] [cSt] / [mm²/s]	20...380 30...80	
Filtration		ISO 4406 (1999) 18/16/13	
		D3FB*0 (Spool/sleeve)	D3FB*3 (Spool/body)
Nominal flow at Δp=5 bar per control edge [1]	[l/min]	40 / 60	40 / 60 / 80
Leakage at 100 bar	[ml/min]	<100	<100
Overlap		25, electrically normalized at 10 (see flow characteristics)	
Static / Dynamic			
Step response at 100 % step	[ms]	40	
Hysteresis	[%]	<4	<5
Temperature drift solenoid current	[%/K]	<0.02	
Electrical characteristics			
Duty ratio	[%]	100 ED; CAUTION: Coil temperature up to 150 °C possible	
Protection class		IP 65 in accordance with EN 60529 (with correctly mounted plug-in connector)	
Solenoid		Code “K“	Code “J“
Supply voltage	[V]	12	24
Current consumption	[A]	2.95	1.5
Resistance	[Ohm]	3.84	16.25
Solenoid connection		Connector as per EN 175301-803	
Wiring min.	[mm²]	3 x 1.5 recommended	
Wiring lenght max.	[m]	50 recommended	

[1] Flow rate for different Δp per control edge:

$$Q_x = Q_{Nom.} \cdot \sqrt{\frac{\Delta p_x}{\Delta p_{Nom.}}}$$

3

Electrical characteristics OBE		
Duty ratio	[%]	100 ED; CAUTION: coil temperatures up to 150 °C possible!
Protection class		IP65 in accordance with EN 60529 (with correctly mounted plug-in connector)
Supply voltage/ripple DC	[V]	18...30, ripple < 5 % eff., surge free
Current consumption max.	[A]	3.5
Pre fusing medium lag	[A]	4.0
Input signal		
Codes F0 & W5 voltage	[V]	+10...0...-10, ripple < 0.01 % eff., surge free, Ri = 100 kOhm, 0...+10 V ⇒ P -> A
Codes S0 & W5 current	[mA]	4...12...20, ripple < 0.01 % eff., surge free, Ri = 200 Ohm, 12...20 mA ⇒ P -> A < 3.6 mA = enable off, > 3.8 mA = enable on (acc. to NAMUR NE43)
Code G0	[mA]	+20...0...-20, ripple < 0.01 % eff., surge free, Ri = 200 Ohm, 0...+20 mA ⇒ P -> A
Differential input max.		
Codes F0, G0 & S0	[V]	30 for terminal D and E against PE (terminal G) 11 for terminal D and E against 0V (terminal B)
Code W5	[V]	30 for terminal 4 and 5 against PE (terminal PE) 11 for terminal 4 and 5 against 0V (terminal 2)
Channel recall signal	[V]	0...2.5: off / 5...30: on / Ri = 100 kOhm
Adjustment ranges Min	[%]	0...50
Adjustment ranges Max	[%]	50...100
Adjustment ranges Ramp	[s]	0...32.5
Interface		RS 232, parametrizing connection 5pole
EMC		EN 61000-6-2, EN 61000-6-4
Central connection		
Codes F0, G0 & S0		6 + PE acc. to EN 175201-804
Code W5		11 + PE acc. to EN 175201-804
Wiring min.		
Codes F0, G0 & S0	[mm²]	7 x 1.0 (AWG16) overall braid shield
Code W5	[mm²]	11 x 1.0 (AWG16) overall braid shield
Wiring length max.		50

Flow characteristics

D3FB

at Δp = 5 bar per metering edge

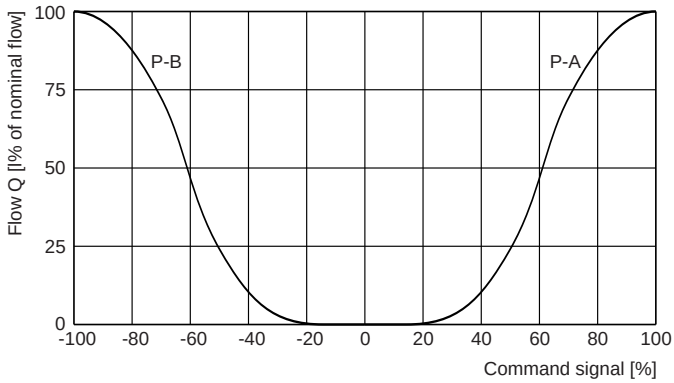

D3FB OBE

(Electrically set to opening point 10 %)
at Δp = 5 bar per metering edge
Spool type E01/02, B31/32

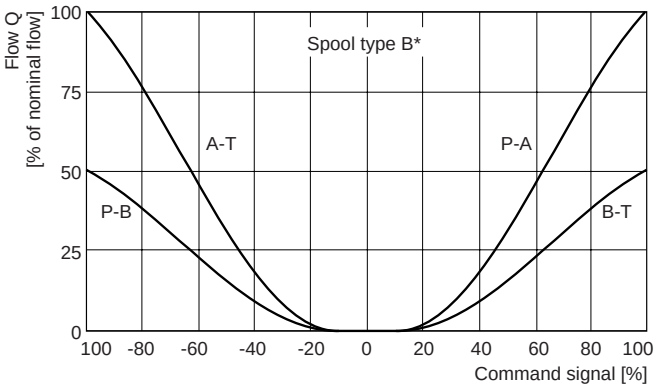

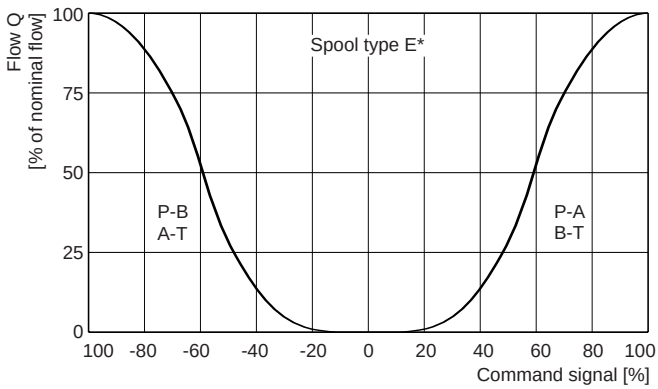

Functional limits

100 % command signal (symmetric flow). At asymmetric flow a reduced flow limit has to be considered.

D3FB*0

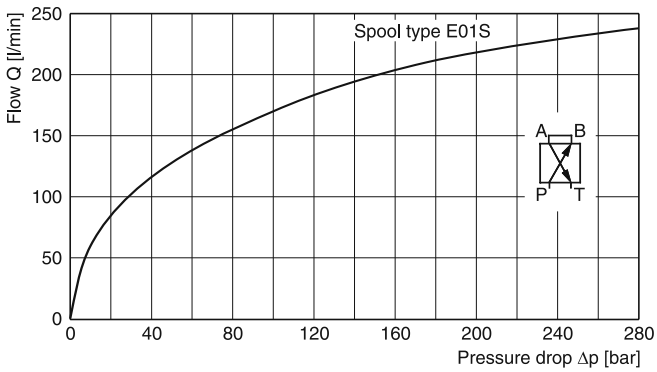

D3FB*3

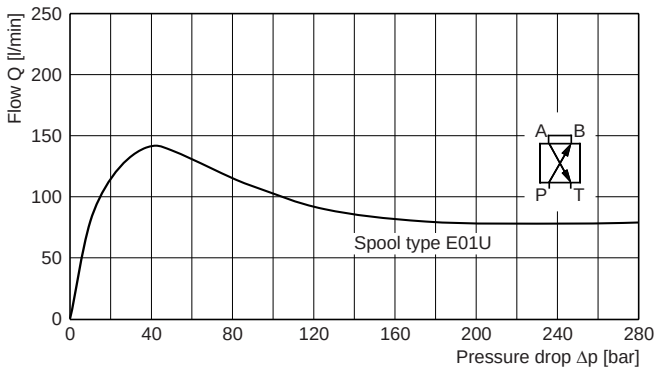

All characteristic curves measured with HLP46 at 50 °C.

3

Code F0
6 + PE acc. to EN 175201-804

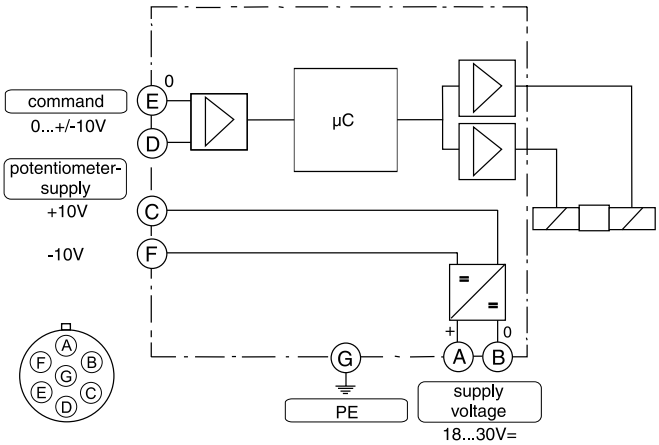

Code G0, S0
6 + PE acc. to EN 175201-804

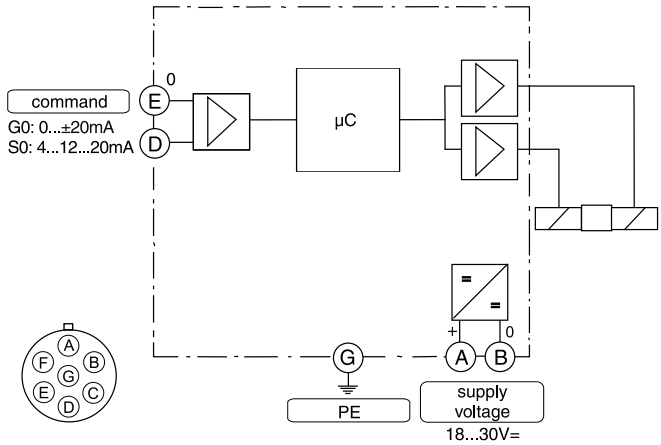

Code W5
11 + PE acc. to EN 175201-804

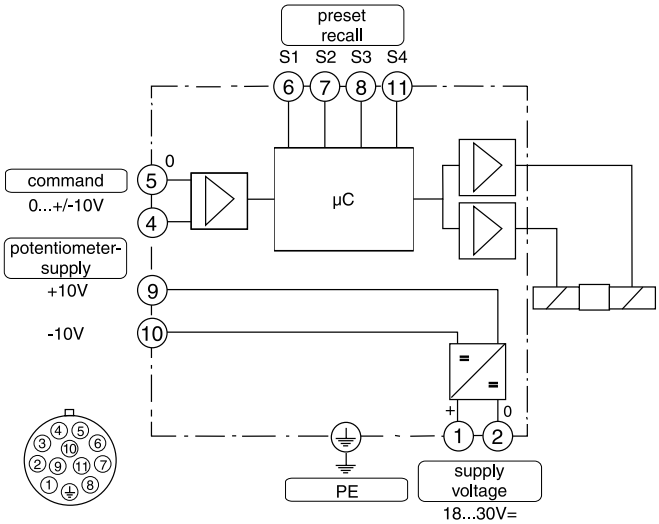

ProPxD interface program

The ProPxD software permits comfortable parameter setting for the module electronics. Via the clearly arranged entry mask the parameters can be noticed and modified. Storage of complete parameter sets is possible as well as printout or record as a text file for further documentation. Stored parameter sets may be loaded anytime and transmitted to other valves. Inside the electronics a non-volatile memory stores the data with the option for recalling or modification.

The PC software can be downloaded free of charge at www.parker.com/euro_hcd – see page “Support".

Features

- Comfortable editing of all parameters
- Depiction and documentation of parameter sets
- Storage and loading of optimized parameter adjustments
- Executable with all actual Windows® operating systems from Windows® 95 upwards
- Plain communication between PC and electronics via serial interface RS-232

The parametrizing cable may be ordered under item no.40982923.

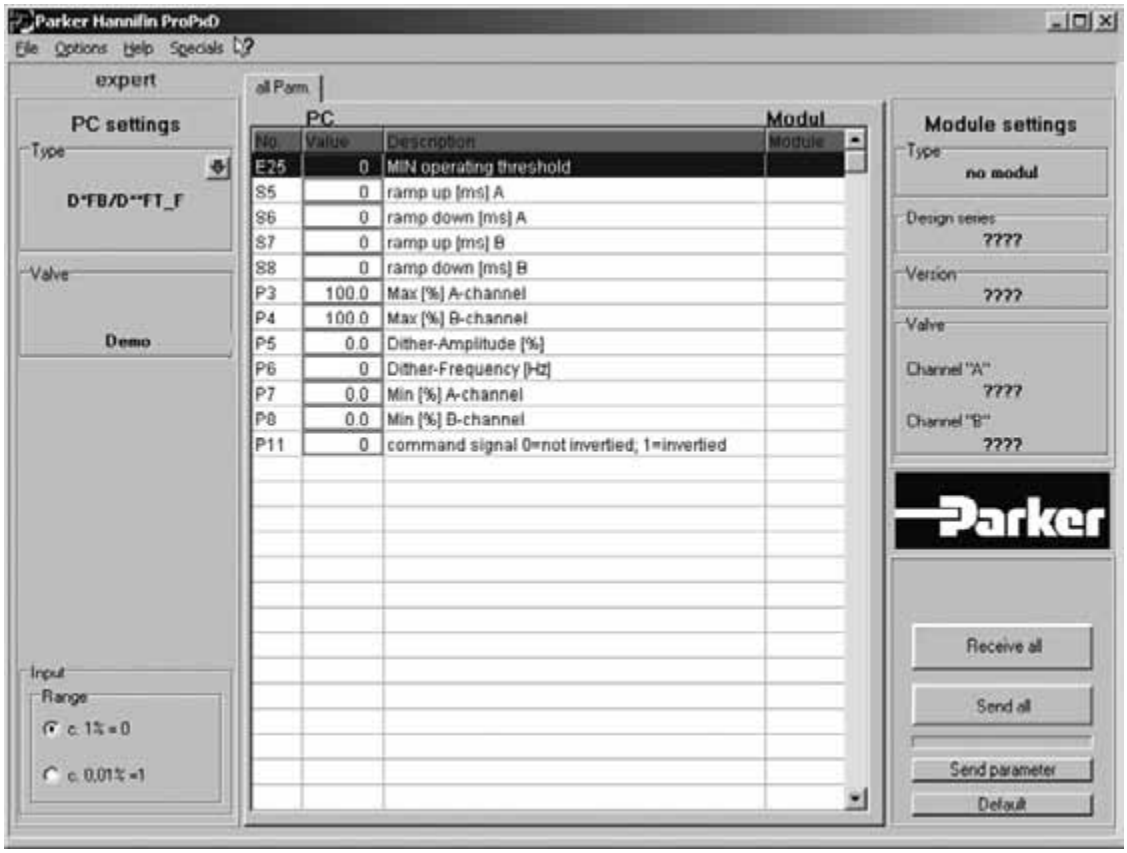

3

D3FB*C

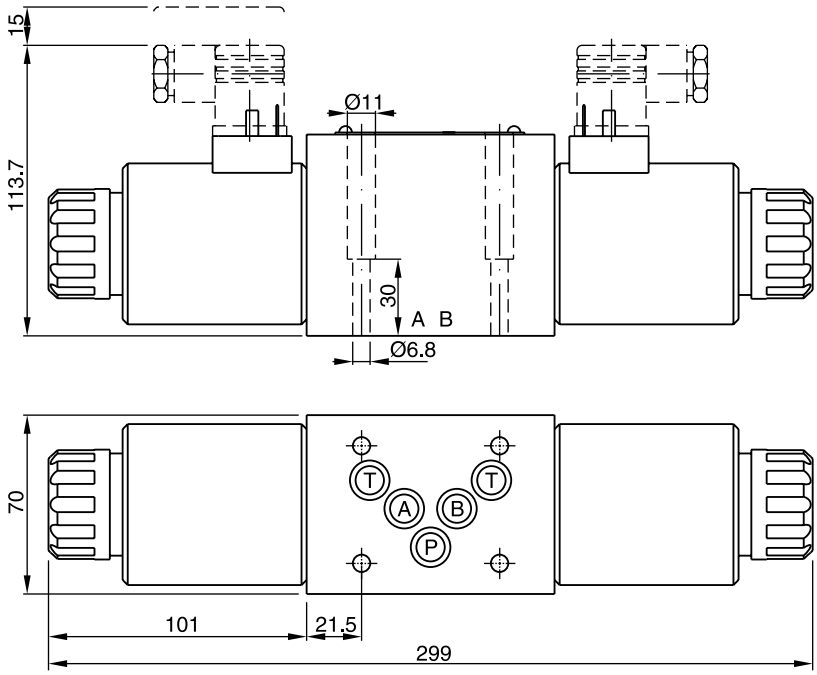

D3FB*E

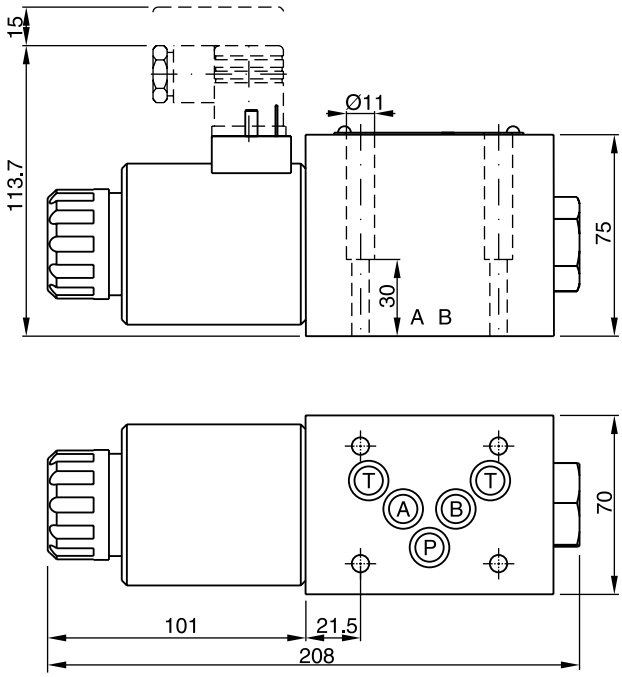

D3FB*K

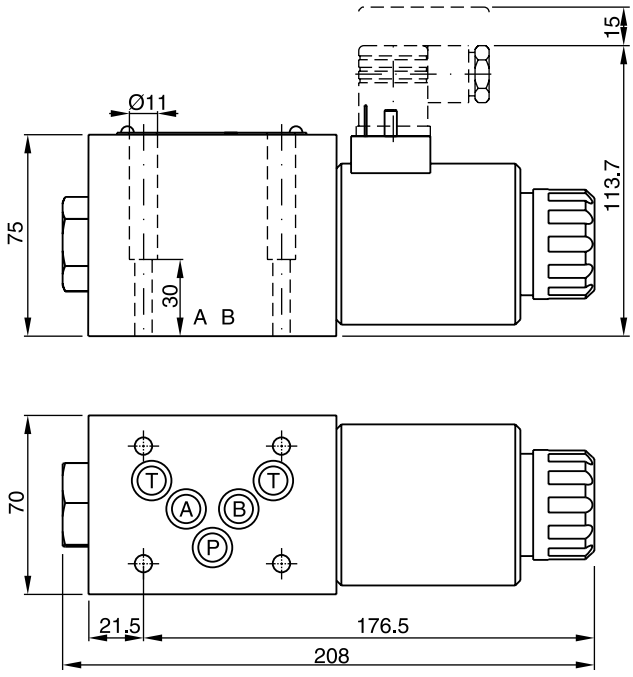

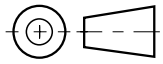

Surface finish	Kit			Kit NBR
R_{max}6.3 ▱ 0.01/100	BK385	4x M6x40 ISO 4762-12.9	13.2 Nm ±15 %	SK-D3FB

D3FB UK.indd RH 29.08.2013

D3FB*C OBE

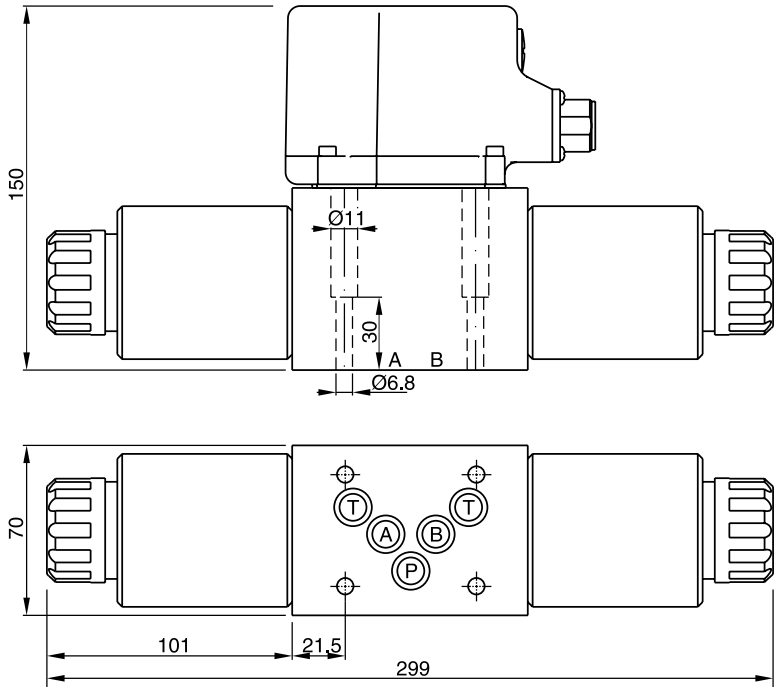

D3FB*E OBE

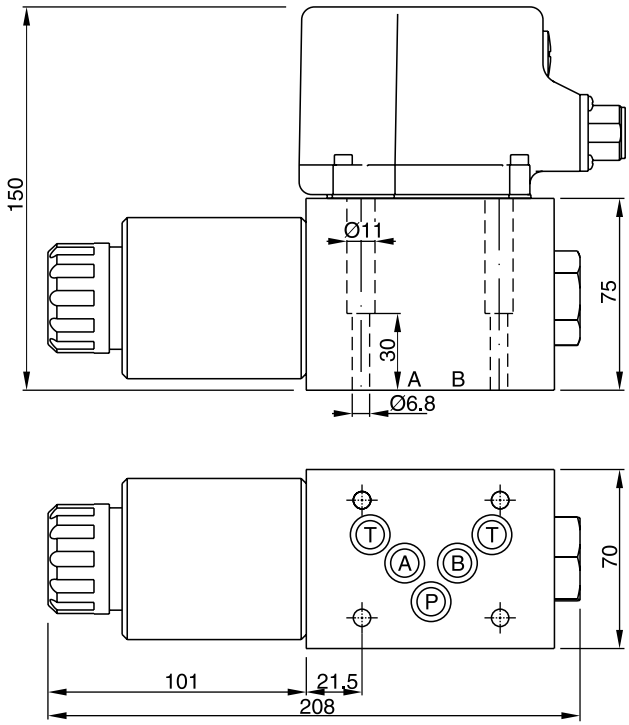

D3FB*K OBE

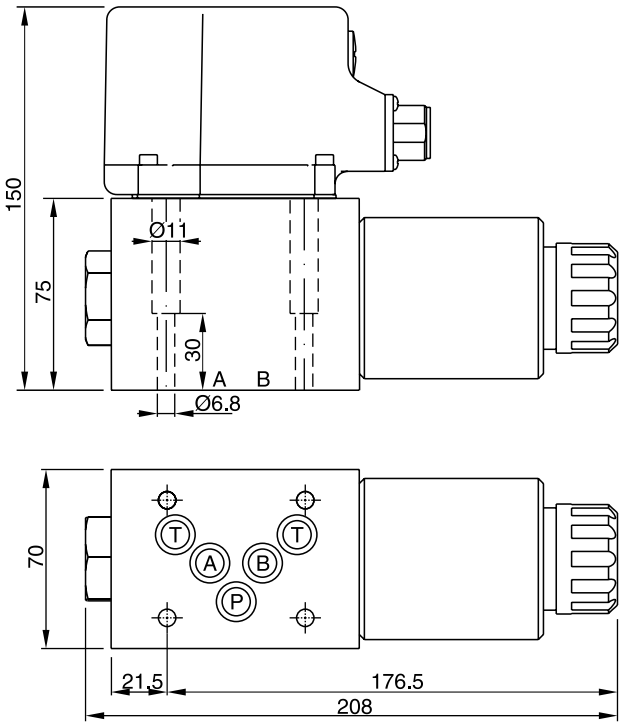

Surface finish	Kit			Kit NBR
R_{max}6.3 ▱ 0.01/100	BK385	4x M6x40 ISO 4762-12.9	13.2 Nm ±15 %	SK-D3FB

D3FB UK.indd RH 29.08.2013

3

The proportional directional valves D1FB (NG06) and D3FB (NG10) with CANopen interface are based on the series for standard digital electronics of the same name.

CANopen-Profile

CANopen Application Layer and Communication Layer
CiA DS - 301 Version 4.01

CANopen Layer Setting Services (LSS) and Protocols
CiA DS – 305 Version 2.0

Device Profile in accordance with
CiA DSP – 408 Version 1.5.2

The baud rate and node ID can be set by dip switches or Layer Setting Service (LSS).

The valve parameters are factory set. Additionally the ProPxD software permits the editing of all parameters via the separate communication port. The software is also used for the valves with digital onboard electronics and the electronics modules. The cable for connection to a serial RS232 interface is available as accessory.

The digital onboard electronics is situated in a robust metal housing and can be used in rough environments.

The series D1FB and D3FB are available with spool/ sleeve design as well as with spool/body design.

D3FB*C

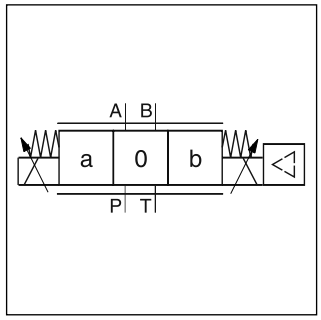

D*FB*C

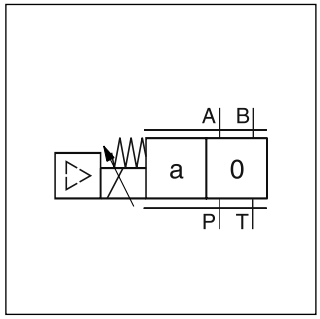

D*FB*E

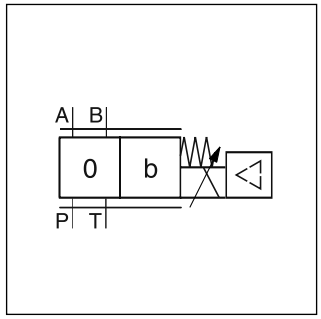

D*FB*K

Technical Features

- CANopen interface
- Spool/sleeve design and spool/body design
- High repeatability from valve to valve
- Low hysteresis
- Manual override
- Failsafe center position

D3FB*C*0
Spool/sleeve design

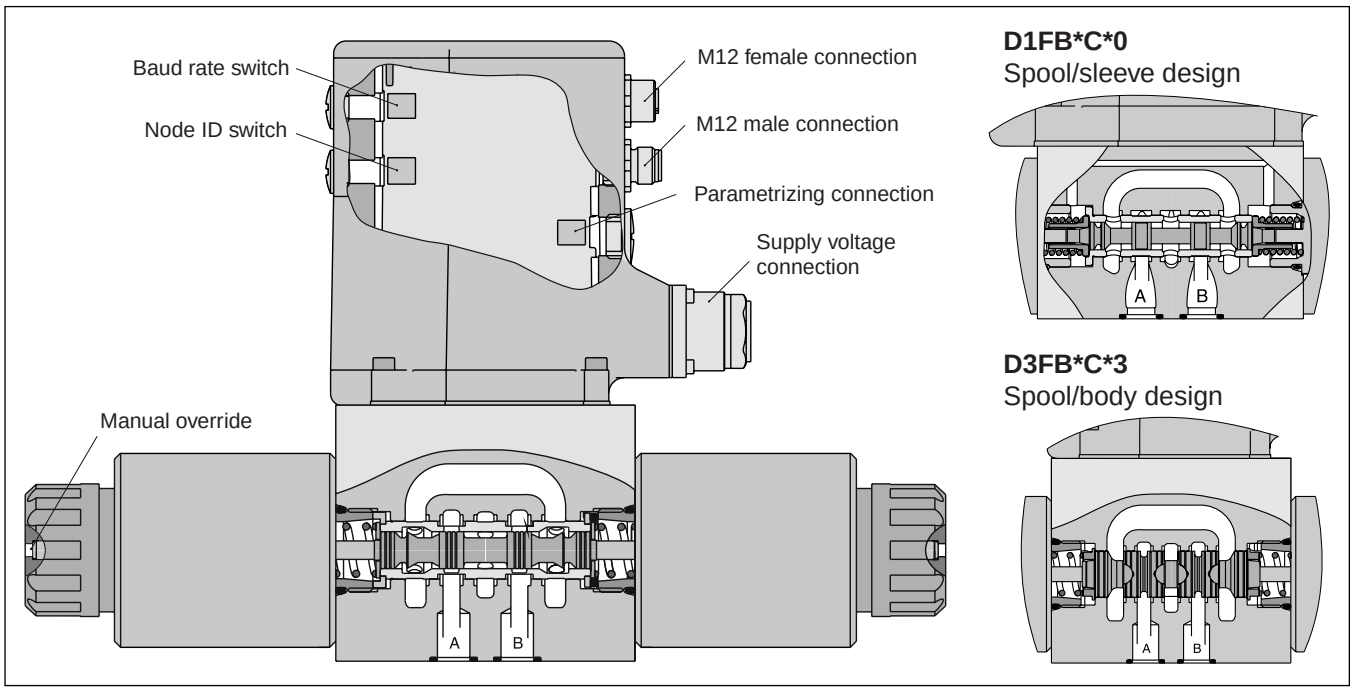

D1FB

D	1	F	B			0	N	U	0		
Directional control valve	**Size DIN NG06 CETOP 03 NFPA D03**	**Proportional control**	**Standard dynamics standard repeatability**	**Spool type**	**Spool position**		**Seals NBR** (other seal compounds on request)	**Communication interface CANopen DSP 408, 6+PE, 1xM12 male 1xM12 female**	**Options**	**Design**	**Design series** (not required for ordering)

D1FB*0: Spool/sleeve design		
Code	Spool type	Flow [l/min] at Δp 5 bar per metering edge
E01H **E01F** **E01C**	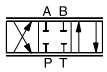	**20** **12** **6**
E02H **E02F** **E02C**		**20** **12** **6**
E03H **E03F** **E03C**		**20** **12** **6**
B31H **B31F**	$Q_B = Q_A/2$ 	**20 / 10** **12 / 6**
B32H **B32F**	$Q_B = Q_A/2$ 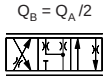	**20 / 10** **12 / 6**

D1FB*3: Spool/body design		
Code	Spool type	Flow [l/min] at Δp 5 bar per metering edge
E01K **E01H** **E01F**	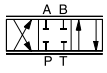	**30** **20** **10**
E02K **E02H** **E02F**		**30** **20** **10**

Code	Design
0	**Spool/sleeve design**
3	**Spool/body design**

Code	Spool position
C	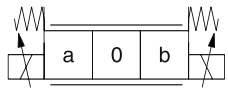
E	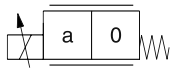
K	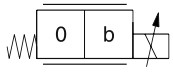

Short delivery time for all variations

Please order connector separately, see chapter 3 accessories.
Parametrizing cable OBE → RS232, Item no. 40982923

D3FB

D	3	F	B			0	N	U	0		
Directional control valve	**Size DIN NG10 CETOP 05 NFPA D05**	**Proportional control**	**Standard dynamics standard repeatability**	**Spool type**	**Spool position**		**Seals NBR** (other seal compounds on request)	**Communication interface CANopen DSP 408, 6+PE, 1xM12 male 1xM12 female**	**Options**	**Design**	**Design series** (not required for ordering)

3

Code	Spool type	Flow [l/min] at Δp 5 bar per metering edge
E01M **E01S** **E01U**[1)]	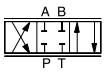	40 60 80
E02M **E02S** **E02U**[1)]		40 60 80
B31M[2)] **B31S**[2)]	$Q_B = Q_A/2$ 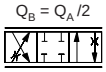	40 / 20 60 / 30
B32M[2)] **B32S**[2)]	$Q_B = Q_A/2$ 	40 / 20 60 / 30

Code	Design
0	**Spool/sleeve design**
3	**Spool/body design**

Code	Spool position
C	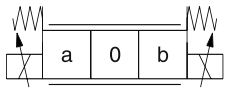
E	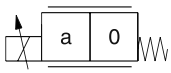
K	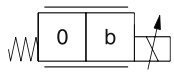

Short delivery time for all variations

Please order connector separately, see chapter 3 accessories.
Parametrizing cable OBE → RS232, Item no. 40982923

[1)] Only for Code 3 Spool/sleeve design.
[2)] Only for Code 0 Spool/body design.

D_FB CANopen UK.indd RH 29.08.2013

General				
Design		Direct operated proportional DC valve		
Actuation		Proportional solenoid		
Size		NG06/CETOP 03/NFPA D03		NG10/CETOP 05/NFPA D05
Mounting interface		DIN 24340 / ISO 4401 / CETOP RP121 / NFPA		
Mounting position		unrestricted		
Ambient temperature	[°C]	-20...+60		
$MTTF_D$ value	[years]	75		
Weight	[kg]	2.5		7
Vibration resistance	[g]	10 Sinus 5...2000 Hz acc. IEC 68-2-6 30 Random noise 20...2000Hz acc. IEC 68-2-36 15 Shock acc. IEC 68-2-27		
Hydraulic				
Max. operating pressure	[bar]	Ports P, A, B 350; Port T 210		
Max. Pressure drop PABT / PBAT	[bar]	350		
Fluid		Hydraulic oil as per DIN 51524...535, other on request		
Fluid temperature	[°C]	-20...+60		
Viscosity permitted	[cSt]/[mm^2/s]	20...380		
recommended	[cSt]/[mm^2/s]	30...80		
Filtration		ISO 4406 (1999) 18/16/13		
		D1FB*0	**D1FB*3**	**D3FB*0/3**
Nominal flow at Δp=5bar per control edge[1)]	[l/min]	6 / 12 / 20	10 / 20 / 30	40 / 60 / 80
Leakage at 100 bar	[ml/min]	<50	<60	<100
Overlap	[%]	25, electrically normalized at 10 (see flow characteristics)		
Static / Dynamic				
Step response at 100 % step	[ms]	30	30	40
Hysteresis	[%]	<4	<6	<5
Temperature drift solenoid current	[%/K]	<0.02		
Electrical characteristics				
Duty ratio	[%]	100; CAUTION: coil temperature up to 150 °C possible		
Protection class		IP65 in accordance with EN 60529 (with correctly mounted plug-in connector)		
Supply voltage/ripple DC	[V]	18...30, ripple < 5 % eff., surge free		
Current consumption max.	[A]	2.0		3.0
Pre fusing medium lag	[A]	2.5		4.0
EMC		EN 61000-6-2, EN 61000-6-4		
Connection supply voltage		6 + PE acc. to EN 175201-804		
Connection CANopen		1 x Male M12x1: 5p 1 x Female M12x1: 5p acc. to IEC61076-2-101		
Wiring supply voltage min.	[mm^2]	3 x 1.0 (AWG16) overall braid shield		
Wiring length supply voltage max.	[m]	50		
Wiring CANopen		acc. to CiA DS-301 Version 4 / Twisted pair cable acc. to ISO11898		
CANopen				
Profiles		Communication Layer CIA DS - 301 version 2 Device Profile in accordance with CIA DS - 408 Version 1.5.2 Layer Setting Service (LSS) CIA DS - 305 Version 2		
Functionality		CANopen slave One PDO (Receive) One PDO (Transmit) One SDO (not useable for valve parameterizing) Emergency object Sync object Node guarding Life guarding Heartbeat time (producer/consumer) Minimum boot - up Node - ID - adjustment by DIP switch and LSS Baud Rate - adjustment by DIP switch and LSS		
Parameterization				
Interface		RS 232, parametrizing cable order code 40982923		
Interface program		ProPxD (see www.parker.com/euro_hcd)		
Adjustment ranges Min	[%]	0...50		
Adjustment ranges Max	[%]	50...100		
Adjustment ranges Ramp	[s]	0...32.5		

1) Flow rate for different Δp per control edge: $Q_x = Q_{Nom.} \cdot \sqrt{\frac{\Delta p_x}{\Delta p_{Nom.}}}$

D_FB CANopen UK.indd RH 29.08.2013

3

D1FB*0 flow characteristics
at Δp = 5 bar per metering edge

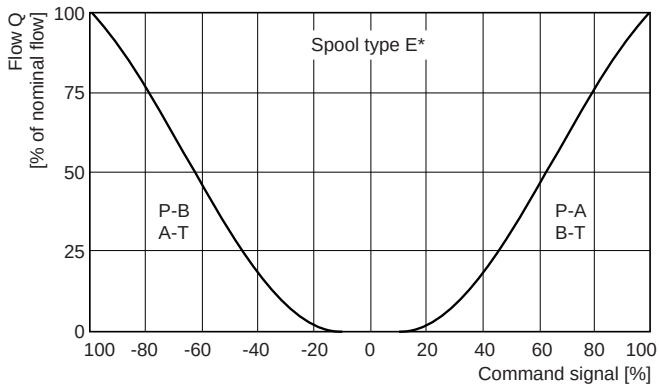

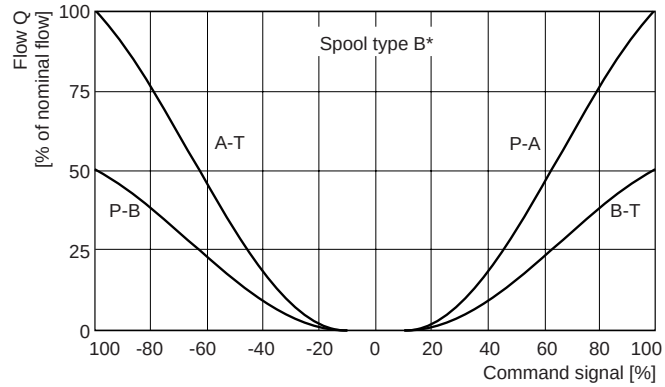

D1FB*0 flow limit
at 25 %, 50 %, 75 % and 100 % command signal (symmetric flow). At asymmetric flow typically a lower flow limit has to be considered.

Spool type E01H

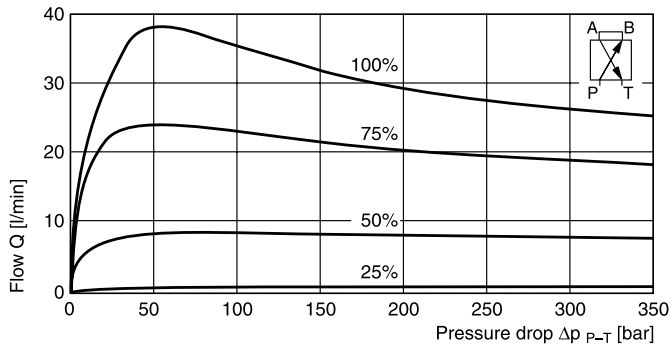

D1FB*3 flow characteristics
at Δp = 5 bar per metering edge

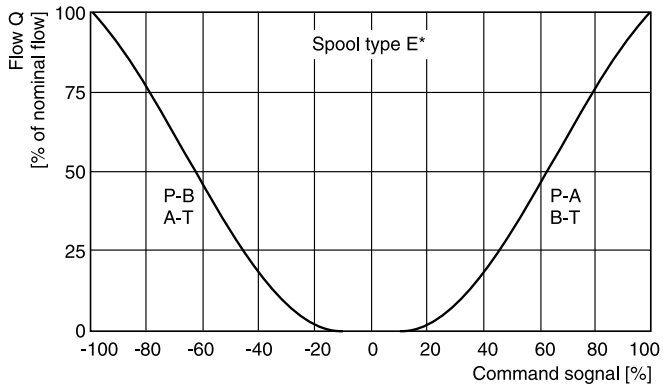

D1FB*3 flow limit
at 25 %, 50 %, 75 % and 100 % command signal (symmetric flow). At asymmetric flow typically a lower flow limit has to be considered.

Spool type E01K

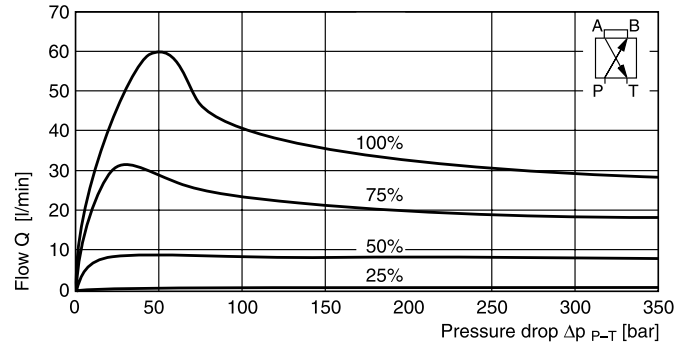

All characteristic curves measured with HLP46 at 50 °C.

D3FB flow characteristics
at Δp = 5 bar per metering edge

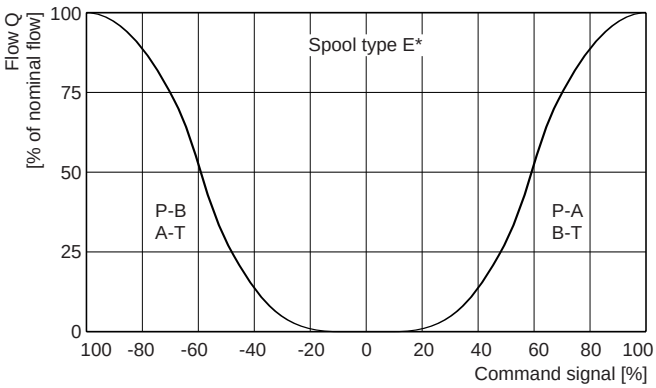

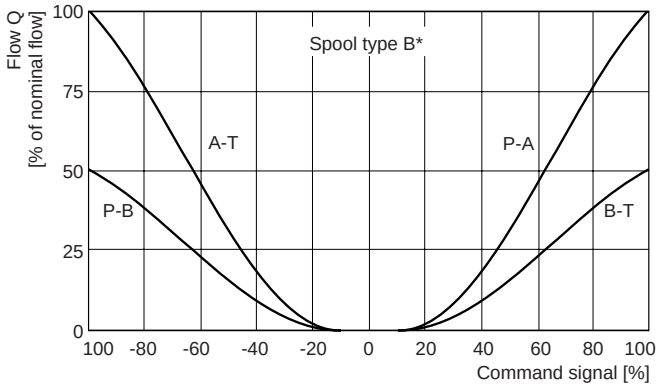

Flow limit
100 % command signal (symmetric flow).
At asymmetric flow typically a lower flow limit has to be considered.

D3FB*0

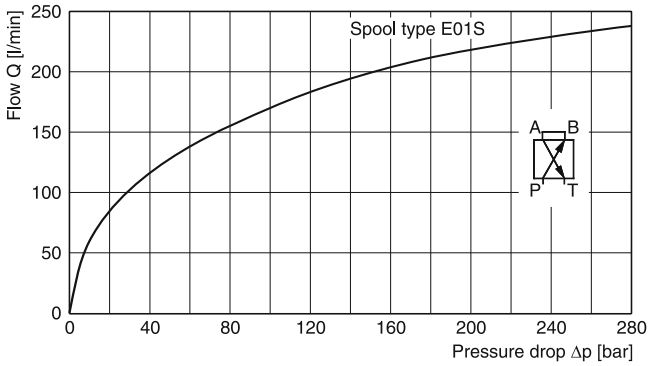

D3FB*3

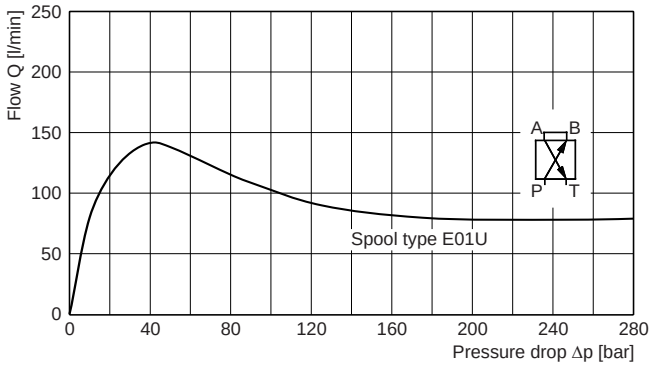

All characteristic curves measured with HLP46 at 50 °C.

Supply voltage connection
6 + PE

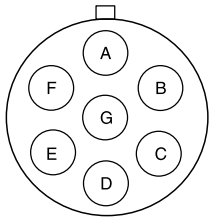

A Supply voltage 18...30 V
B Supply voltage 0 V
C nc
D nc
E nc
F nc
G PE

CANopen connection

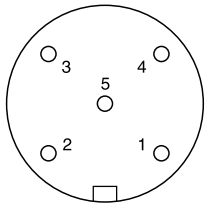

CAN in: M12, 5 pole male terminals.
Pin 1: CAN_SHLD
Pin 2: nc
Pin 3: CAN_GND
Pin 4: CAN_H
Pin 5: CAN_L

Shield is CAN_GND.

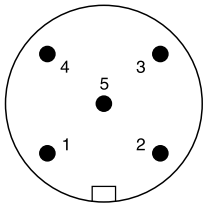

CAN out: M12, 5 pole female terminals.
Pin 1: CAN_SHLD
Pin 2: nc
Pin 3: CAN_GND
Pin 4: CAN_H
Pin 5: CAN_L

Shield is CAN_GND.

3

Node–ID adjustment with DIP switches

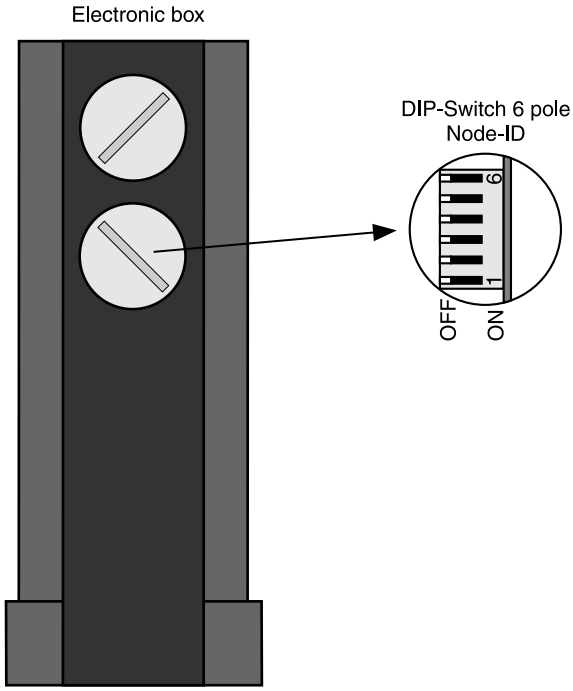

Node-ID	DIP switch setting					
	1	2	3	4	5	6
0 LSS -priority	**OFF**	**OFF**	**OFF**	**OFF**	**OFF**	**OFF**
1	**ON**	OFF	OFF	OFF	OFF	OFF
2	OFF	**ON**	OFF	OFF	OFF	OFF
3	**ON**	**ON**	OFF	OFF	OFF	OFF
…						
61	**ON**	OFF	**ON**	**ON**	**ON**	**ON**
62	OFF	**ON**	**ON**	**ON**	**ON**	**ON**
63	**ON**	**ON**	**ON**	**ON**	**ON**	**ON**
	1	2	3	4	5	6
	value					

Baud Rate adjustment with DIP switches

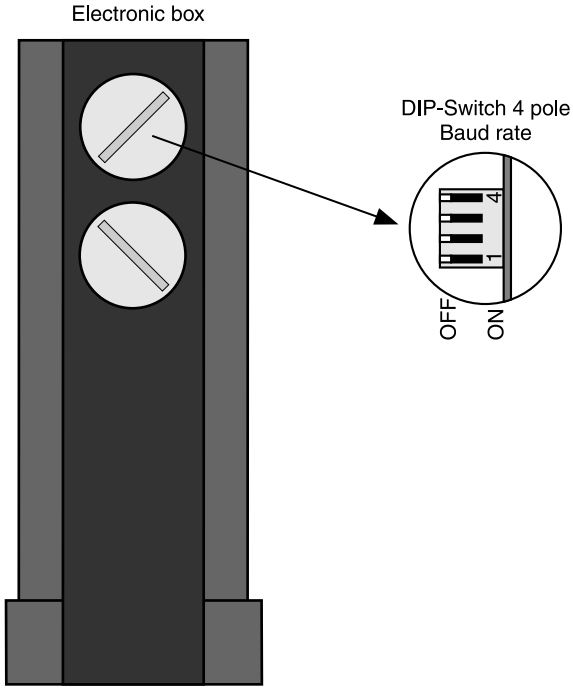

Baud Rate	DIP switch setting			
	1	2	3	4
0 LSS -priority	**OFF**	**OFF**	**OFF**	valve parameterization and diagnostics ON/OFF
10 kBit/s	**ON**	OFF	OFF	
20 kBit/s	OFF	**ON**	OFF	
50 kBit/s	**ON**	**ON**	OFF	
125 kBit/s	OFF	OFF	**ON**	
250 kBit/s	**ON**	OFF	**ON**	
500 kBit/s	OFF	**ON**	**ON**	
1 MBit/s	**ON**	**ON**	**ON**	

ProPxD interface program

The ProPxD software permits comfortable parameter setting for the module electronics. Via the clearly arranged entry mask the parameters can be noticed and modified. Storage of complete parameter sets is possible as well as printout or record as a text file for further documentation. Stored parameter sets may be loaded anytime and transmitted to other valves. Inside the electronics a non-volatile memory stores the data with the option for recalling or modification.

The PC software can be downloaded free of charge at www.parker.com/euro_hcd – see page “Support".

Features

- Comfortable editing of all parameters
- Depiction and documentation of parameter sets
- Storage and loading of optimized parameter adjustments
- Executable with all actual Windows® operating systems from Windows® 95 upwards
- Plain communication between PC and electronics via serial interface RS-232

The parametrizing cable may be ordered under item no.40982923.

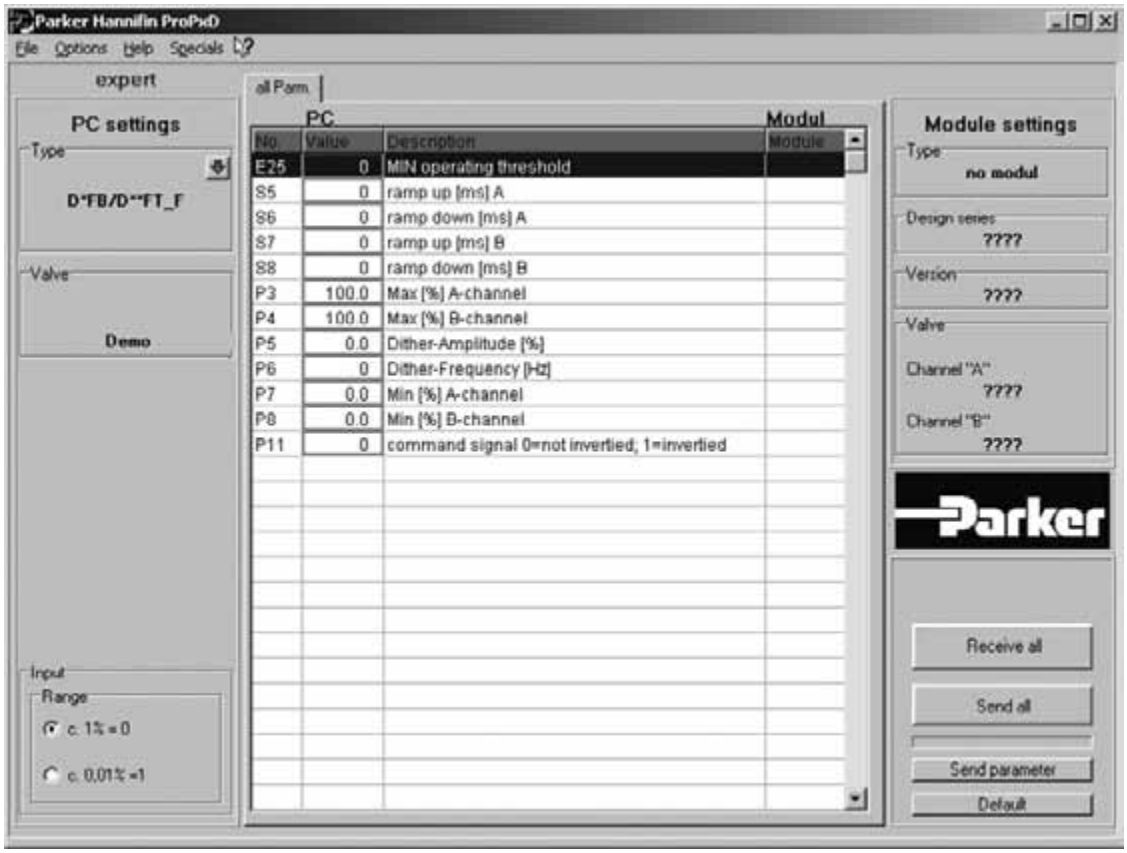

3

D1FB*C

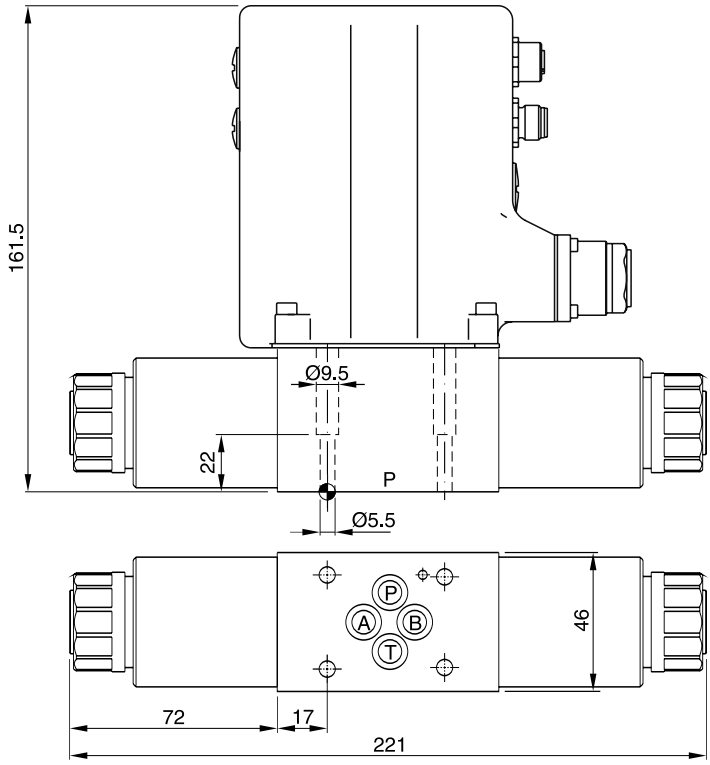

D1FB*E

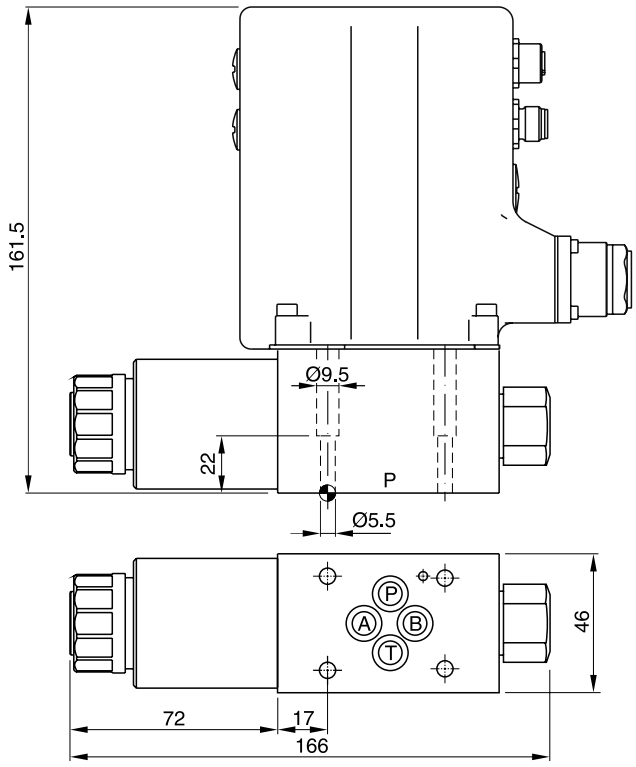

Surface finish	Kit			Kit NBR
R_{max}6.3 ▱ 0.01/100	BK375	4x M5x30 ISO 4762-12.9	7.6 Nm ±15%	SK-D1FB

D_FB CANopen UK.indd RH 29.08.2013

D3FB*C

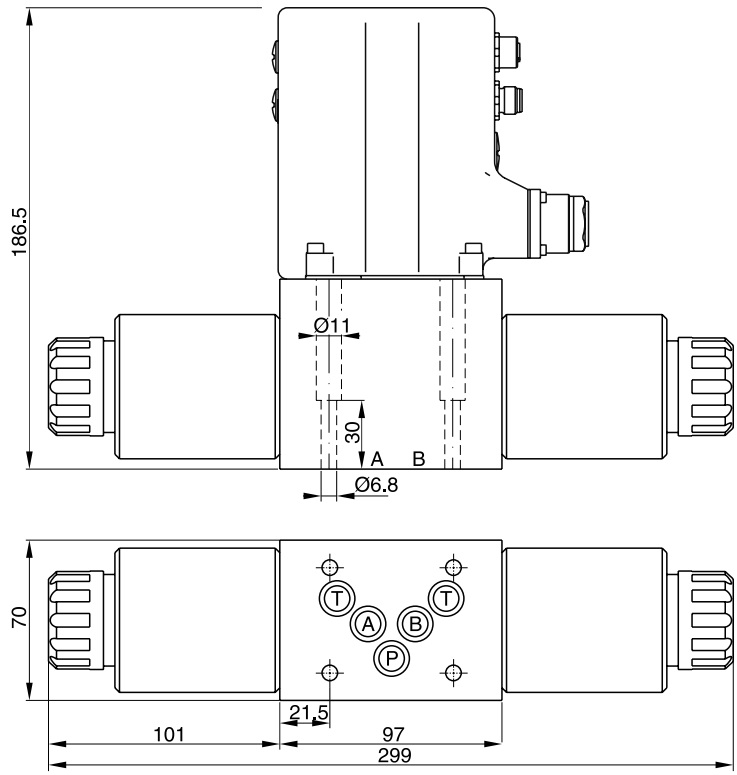

D3FB*E

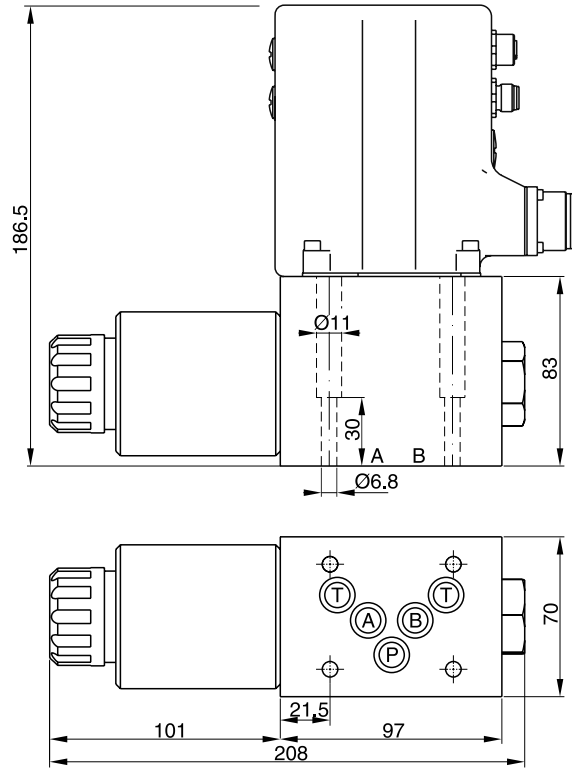

Surface finish	Kit			Kit NBR
R_{max}6.3 ▱ 0.01/100	BK385	4x M6x40 ISO 4762-12.9	13.2 Nm ±15%	SK-D3FB

D_FB CANopen UK.indd RH 29.08.2013

3

The pilot operated proportional directional valves D*1FB are available in 4 sizes:

D31FB - NG10 (CETOP 05)
D41FB - NG16 (CETOP 07)
D91FB - NG25 (CETOP 08)
D111FB - NG32 (CETOP 10)

The valves are available with and without onboard electronics (OBE).

D*1FB OBE

The digital onboard electronics is situated in a robust metal housing, which allows the usage under rough environmental conditions.

The nominal values are factory set. The cable connection to a serial RS232 interface is available as accessory.

D*1FB for external electronics

The parameters can be saved, changed and duplicated in combination with the digital power amplifier PWD00A-400.

The valve parameters can be edited with the common ProPxD software for both versions.

The D*1FB valves work with barometric feedback of the main stage to the pressure reducing pilot valve. The pilot control pressure of 25 bar allows high flow rates at maximum stability.

The innovative integrated regenerative function into the A-line (optional) allows energy saving circuits for differential cylinders. The hybrid version can be switched between regenerative mode and standard mode at any time.

Valves with explosion proof solenoids EEx me II see catalogue HY11-3343.

Download: www.parker.com/euro_hcd - see “Literature”

D91FB OBE

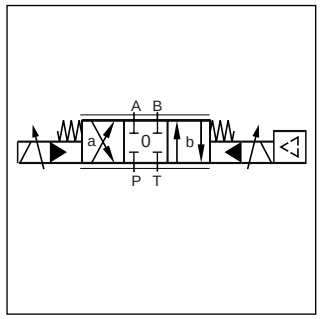

Standard D*1FB OBE

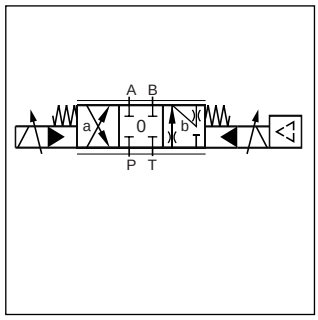

A-regeneration D*1FBR OBE

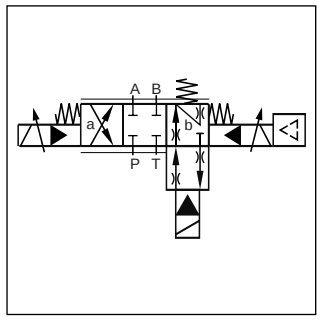

Hybrid D*1FBZ OBE

Technical Features

- Progressive flow characteristics for sensitive adjustment of flow rate
- High flow capacity
- Digital onboard electronics optional
- Centre position monitoring optional
- Energy saving A-regeneration optional
- Switchable hybrid version optional

Further literature about the opportunities of energy savings and more functional details of the integrated regeneration is available on request.

D91FB OBE

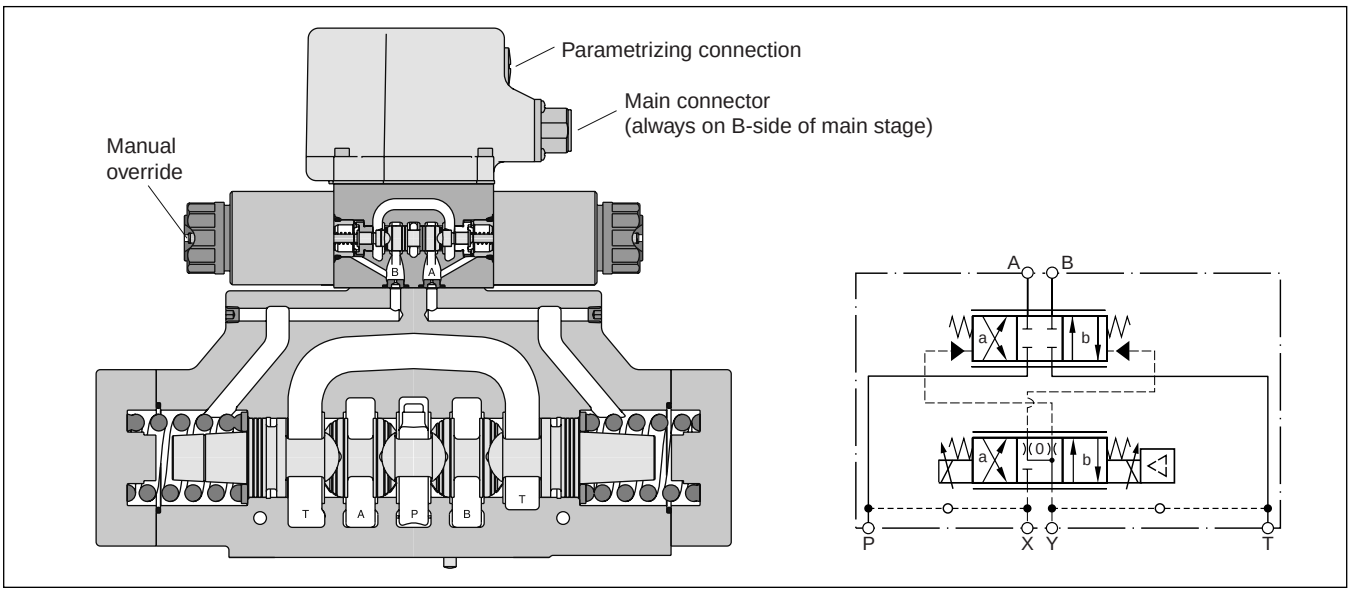

D*1FBR and D*1FBZ

Regenerative valve D*1FBR

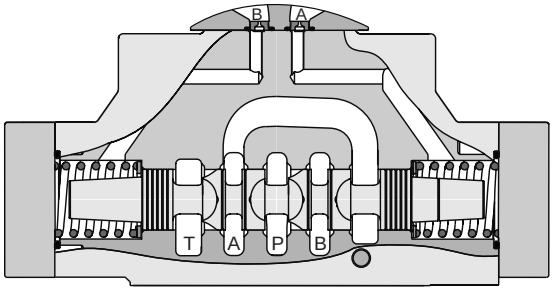

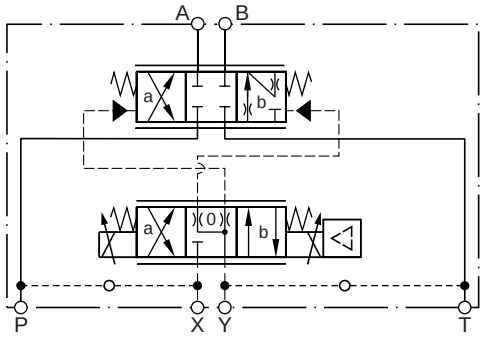

Hybrid valve D*1FBZ

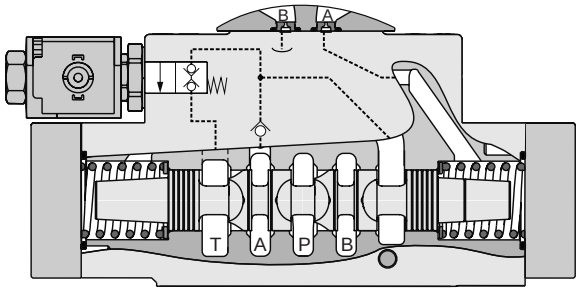

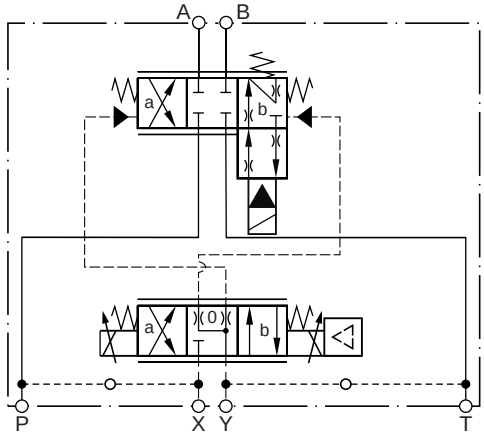

D*1FBR (regenerative valve)
Cylinder extending

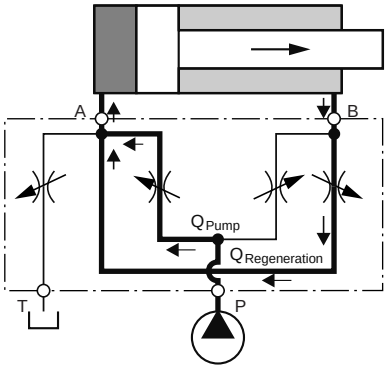

D*1FBZ (hybrid valve)
Cylinder extending
regenerative mode
(high speed)

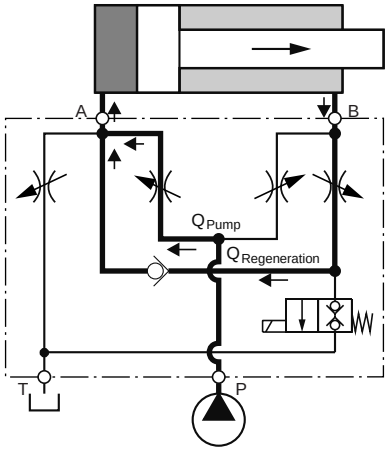

Cylinder extending
standard mode
(high force)

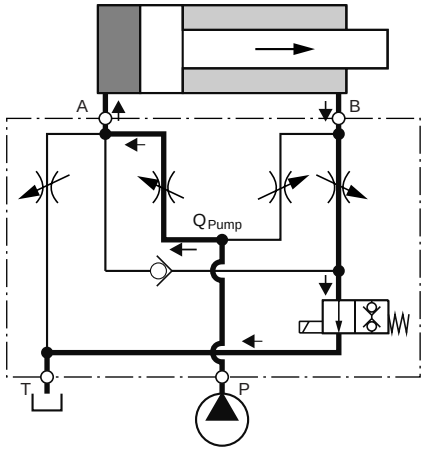

Flow rate in % of nominal flow

Size [1]	spool	Port					
		A-T	P-A	P-B	B-A (R-valve)	B-A (hybrid)	B-T (hybrid)
D41FBR/Z	31/32	100 %	50 %	100 %	50 %	45 %	20 %
D91FBR/Z	31/32	100 %	50 %	100 %	50 %	50 %	25 %
D111FBR/Z	31/32	100 %	50 %	100 %	50 %	50 %	20 %

[1] D31FB: For size NG10 please refer solution with sandwich- and adaptor plates "A10-1664 / A10-1665L / H10-1662 / H10-1666L" in chapter 12.

3

D*1FB

D		1	F	B									
Directional control valve	Size	NG06 pilot	Proportional control	Dynamics standard	Function	Flow	Spool position	Pilot connection	Seal	Solenoid description (other voltage on request)	Electronic options	Valve options	Design series (not required for ordering)

Code	Nominal size
3	NG10 / CETOP 05
4	NG16 / CETOP 07
9 [1]	NG25 / CETOP 08
11	NG32 / CETOP 10

Standard		NEW: Regenerative function [2]		NEW: Hybrid function [2] [3]	
Code	Spool type	Code	Spool type	Code	Spool type
E01	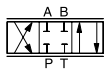	R31	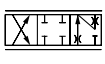	Z31	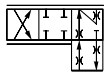
E02	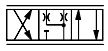	R32		Z32	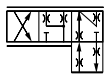
B31	$Q_B = Q_A/2$ 				
B32	$Q_B = Q_A/2$ 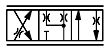				

Code	Flow [l/min] at Δp = 5 bar per metering edge			
	D31	D41	D91	D111
B	–	100 [4] [5]	–	–
C	75 [5]	130 [4] [5]	–	–
D	90 [5]	–	–	–
E	120	–	250 [4] [5]	–
F	–	200	-	–
H	–	–	400	–
L	–	–	–	1000

Code	Valve options
0	Standard
8 [9]	Monitor switch
L [8]	Hybrid valve 24 V normaly closed for spool type Z

Code	Electronic options
W [6]	EN 175301-803
J [6] [7]	DT04-2P "Deutsch"

Code	Solenoid voltage
J	24 V/1,1A
K	12 V/2,5A

Code	Seal
N	NBR
V	FPM

Code	Inlet	Drain
1	Internal	External
2	External	External
4	Internal	Internal
5	External	Internal

Code	Design
C	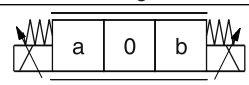
E	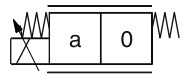
K	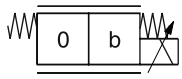

[1] With enlarged connections Ø 32 mm.
[2] For regenerative and hybrid function at D31FB (NG10) please refer solutions with sandwich- and adaptor plates "A10-1664 / A10-1665L / H10-1662 / H10-1666L" in chapter 12.

D31FB spool type: R31 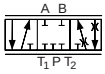 R32 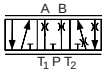

[3] Not for D31FB.
[4] Not for spool type B31 und B32.
[5] Not for regenerative and hybrid function.
[6] Please order plugs separately. See accessories.
[7] Not for hybrid function.
[8] See page "regenerative and hybrid function" (not for D31FB).
[9] Not for D111FBZ*.

Short delivery time for all variations

D_1FB UK.indd RH 29.08.2013

D*1FB OBE

D		1	F	B									
Directional control valve	Size	NG06 pilot	Proportional control	Onboard electronics	Function	Flow	Spool position	Pilot connection	Seal	Command signal	Option	Valve options	Design series (not required for ordering)

Code	Nominal size
3	NG10 / CETOP 05
4	NG16 / CETOP 07
9 [1]	NG25 / CETOP 08
11	NG32 / CETOP 10

Code	Valve options
0	Standard
8 [11]	Monitor switch
L [10]	Hybrid valve 24V normaly closed for spool type Z

Standard		Regenerative function [2]		Hybrid function [2] [3]	
Code	Spool type	Code	Spool type	Code	Spool type
E01	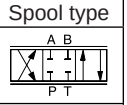				
E02					
B31	$Q_B = Q_A/2$ 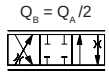	R31	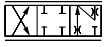	Z31	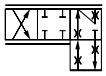
B32	$Q_B = Q_A/2$ 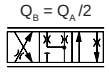	R32		Z32	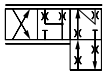

Code	Command signal [7]	Function	Connection [6]
F0 [9]	0...±10 V	0...+10 V > P-B	6 + PE
G0 [8]	0...±20 mA	0...+20 mA > P-B	6 + PE
M0 [8] [9]	0...±10 V	0...+10 V > P-A	6 + PE
S0	4...20 mA	12...20 mA > P-A	6 + PE
W5 [8] [9]	0...±10 V 4...20 mA	0...+10 V > P-A 12...20 mA > P-A	11 + PE

Code	Seal
N	NBR
V	FPM

Code	Flow [l/min] at Δp = 5 bar per metering edge			
	D31	D41	D91	D111
B	–	100 [4] [5]	–	–
C	75 [5]	130 [4] [5]	–	–
D	90 [5]	–	–	–
E	120	–	250 [4] [5]	–
F	–	200	-	–
H	–	–	400	–
L	–	–	–	1000

Code	Inlet	Drain
1	Internal	External
2	External	External
4	Internal	Internal
5	External	Internal

Code	Design
C	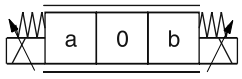
E	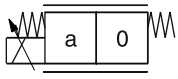
K	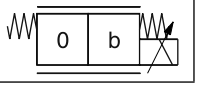

Parametrizing cable OBE → RS232, item no. 40982923

[1] With enlarged connections Ø 32 mm.
[2] For regenerative and hybrid function at D31FB (NG10) please refer solutions with sandwich- and adaptor plates "A10-1664 / A10-1665L / H10-1662 / H10-1666L" in chapter 12.

D31FB spool type: R31 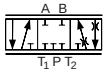 R32 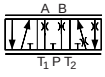

[3] Not for D31FB.
[4] Not for spool type B31 und B32.
[5] Not for regenerative and hybrid function.
[6] Please order plugs seperately, see accessories .
[7] For 1 solenoid 0...+10 V respectively 4...20 mA.
[8] Not for spool position E and K.
[9] F0, M0 potentiometer supply, W5 command channel & potentiometer supply.
[10] See page "regenerative and hybrid function" (not for D31FB).
[11] Not for D111FBZ*.

Short delivery time for all variations

D_1FB UK.indd RH 29.08.2013

3

General					
Design		Pilot operated DC valve			
Actuation		Proportional solenoid			
Size		NG10 (CETOP 05)	NG16 (CETOP 07)	NG25 (CETOP 08)	NG32 (CETOP 10)
Mounting interface		DIN 24340 / ISO 4401 / CETOP RP121 / NFPA			
Mounting position		unrestricted			
Ambient temperature	[°C]	-20...+60			
$MTTF_D$ value (OBE)	[years]	75 (50)			
Weight (OBE)	[kg]	8.6 (9.3)	11.9 (12.6)	20.4 (21.1)	68 (68.7)
Vibration resistance	[g]	10 Sinus 5...200 Hz acc. IEC 68-2-6 30 Random noise 20...20 Hz acc. IEC 68-2-36 15 Shock acc. IEC 68-2-27			
Hydraulic					
Max. operating pressure	[bar] [bar]	Pilot drain internal: P, A, B, X 350; T, Y 185 (NG10: T, Y 15) Pilot drain external: P, A, B, T, X 350; Y 185 (NG10: Y 15)			
Fluid		Hydraulic oil as per DIN 51524 ... 51535, other on request			
Fluid temperature	[°C]	-20...+60			
Viscosity permitted	[cSt] / [mm²/s]	20...380			
Viscosity recommended	[cSt] / [mm²/s]	30...80			
Filtration		ISO 4406 (1999) 18/16/13			
Nominal flow at Δp=5 bar per control edge [1]	[l/min]	75/90/120	130/200	250/400	1000
Leakage at 100 bar	[ml/min]	100	200	600	1000
Pilot supply pressure	[bar] [bar] [bar]	min. 30 (+ T/Y pressure) max. 350 optimal dynamics at 50			
Pilot flow at 100 bar	[l/min]	<0.5	<1.2	<1.2	<1.2
Pilot flow, step response	[l/min]	2.0	1.9	4.5	18
Static / Dynamic					
Step response at 100 % step	[ms]	50	75	100	180
Hysteresis	[%]	<5			
Electrical characteristics					
Duty ratio	[%]	100 ED; CAUTION: Coil temperature up to 150 °C possible			
Protection class		Standard (as per EN175301-803) IP65 in accordance with EN 60529 DT04-2P "Deutsch" IP69K (with correctly mounted plug-in connector)			
Solenoid	Code	K		J	
Supply voltage	[V]	12		24	
Current consumption	[A]	2.5		1.1	
Resistance	[Ohm]	4.4		18.6	
Solenoid connection		Connector as per EN 175301-803 (code W), DT04-2P "Deutsch" connector (code J). Solenoid identification as per ISO 9461.			
Wiring min.	[mm²]	3x1.5 (AWG 16) overall braid shield			
Wiring lenght max.	[m]	50			

[1] Flow rate for different Δp per control edge:

$$Q_x = Q_{Nom.} \cdot \sqrt{\frac{\Delta p_x}{\Delta p_{Nom.}}}$$

Electrical characteristics (D*1FB OBE)		
Duty ratio	[%]	100 ED; CAUTION: coil temperature up to 150 °C possible
Protection class		IP65 in accordance with EN 60529 (with correctly mounted plug-in connector)
Supply voltage/ripple DC	[V]	18...30, ripple < 5 % eff., surge free
Current consumption max.	[A]	2.0
Pre fusing medium lag	[A]	2.5
Input signal voltage		
Codes F0, M0, W5	[V]	+10...0...-10, ripple < 0.01 % eff., surge free, Ri = 100 kOhm
Code G0	[V]	+20...0...-20, ripple < 0.01 % eff., surge free, Ri = 200 Ohm
Codes S0 & W5 current	[mA]	4...12...20, ripple < 0.01 % eff., surge free, Ri = 200 Ohm < 3.6 mA = enable off, > 3.8 mA = enable on (acc. to NAMUR NE43)
Differential input max.		
Codes F0, M0 G0 & S0	[V]	30 for terminal D and E against PE (terminal G)
	[V]	11 for terminal D and E against 0V (terminal B)
Code W5	[V]	30 for terminal 4 and 5 against PE (terminal PE)
	[V]	11 for terminal 4 and 5 against 0V (terminal 2)
Channel recall signal	[V]	0...2.5: off / 5...30: on / Ri = 100 kOhm
Adjustment ranges Min	[%]	0...50
Max	[%]	50...100
Ramp	[s]	0...32.5
Interface		RS 232, parametrizing connection 5pole
EMC		EN 61000-6-2, EN 61000-6-4
Central connection		
Codes F0, M0 G0 & S0		6 + PE acc. to EN 175201-804
Code W5		11 + PE acc. to EN 175201-804
Wiring min.		
Codes F0, M0 G0 & S0	[mm²]	7 x 1.0 (AWG16) overall braid shield
Code W5	[mm²]	11 x 1.0 (AWG16) overall braid shield
Wiring length max.		50

Electrical characteristics hybrid option

Duty ratio	[%]	100 ED; CAUTION: Coil temperature up to 150 °C possible		
Protection class		IP 65 in accordance with EN 60529 (with correctly mounted plug-in connector)		
		D41	**D91**	**D111**
Supply voltage	[V]	24	24	24
Tolernace supply voltage	[%]	±10	±10	±10
Current consumption	[A]	1.21	0.96	1.29
Power consumption	[W]	29	23	31
Solenoid connection		Connector as per EN 175301-803		
Wiring min.	[mm²]	3 x 1.5 recommended		
Wiring length max.	[m]	50 recommended		

With electrical connections the protective conductor (PE ⏚) must be connected according to the relevant regulations.

D*1FB B/E Flow characteristics

at Δp = 5 bar per metering edge

Spool code **E01/02**

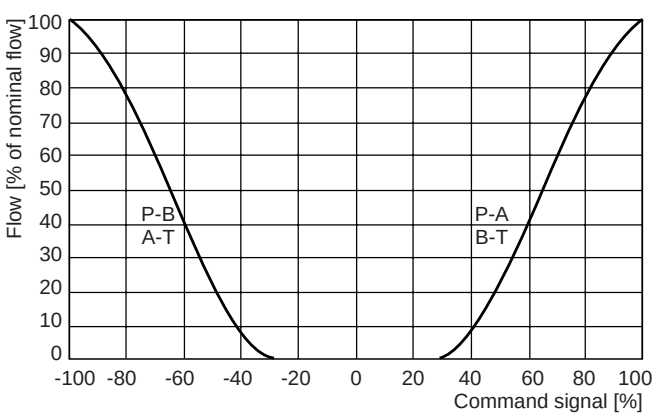

Spool code **B31/32***

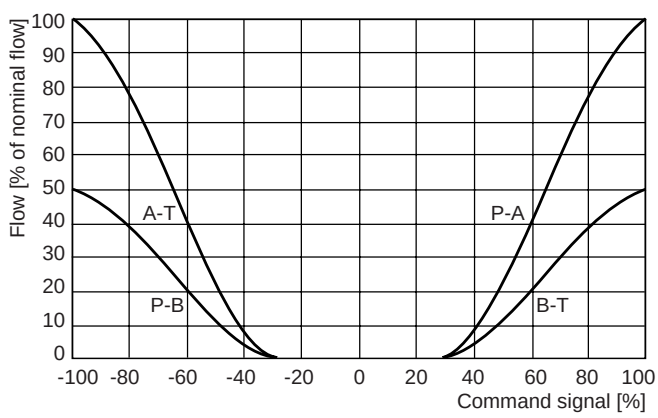

All characteristic curves measured with HLP46 at 50 °C.

D_1FB UK.indd RH 29.08.2013

3

D*1FB B/E OBE
Flow characteristics
(Electrically set to opening point 10 %)
at Δp = 5 bar per metering edge

Spool code **E01/02**

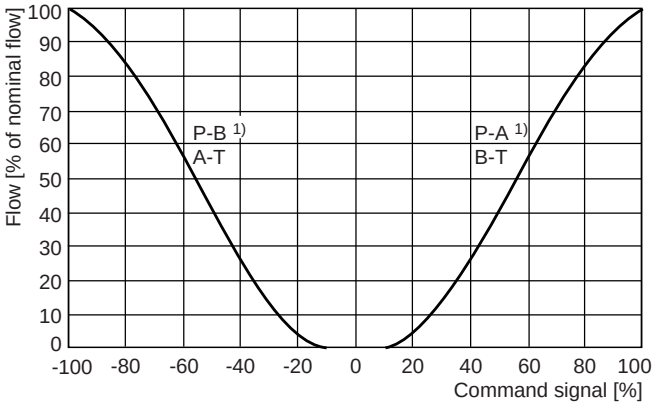

Spool code **B31/32**

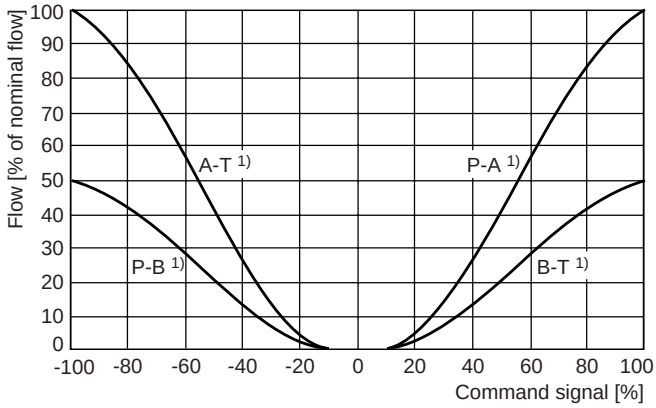

D*1FB R/Z (regenerative and hybrid)
D41FB R/Z
Spool code **R/Z31/32**

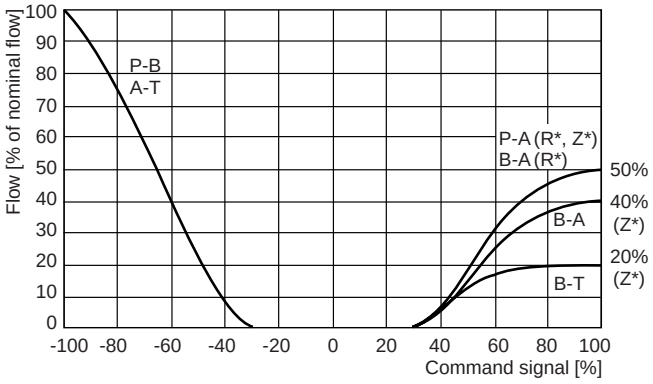

D91FB R/Z
Spool code **R/Z31/32**

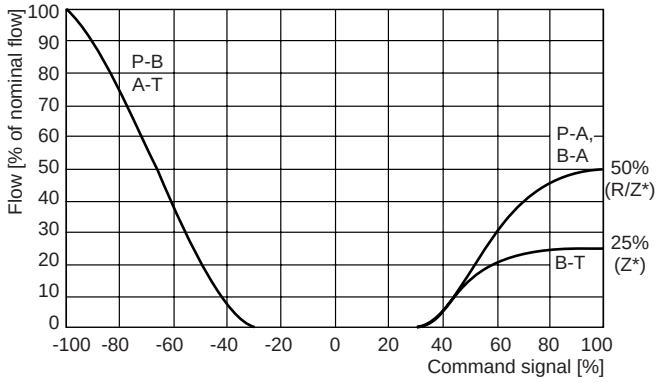

D41FB R/Z OBE
Spool code **R/Z31/32**

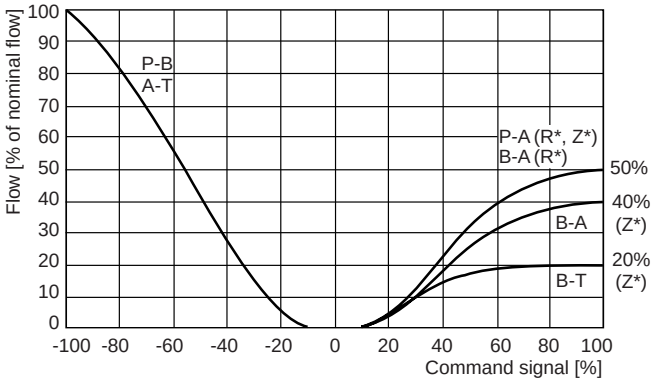

D91FB R/Z OBE
Spool code **R/Z31/32**

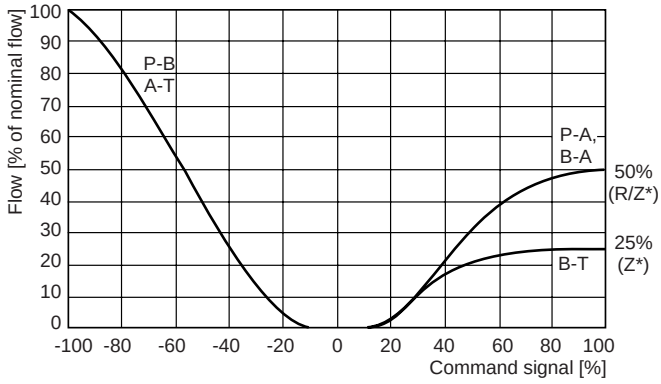

All characteristic curves measured with HLP46 at 50 °C.

[1] Flow direction depending on ordering code.

D_1FB UK.indd RH 29.08.2013

Monitor switch M12x1 pin assignment

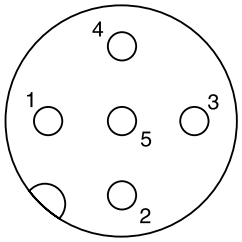

1 + Supply 18...42 V
2 output B (normally closed)
3 0V
4 output A (normally closed)
5 Earth ground

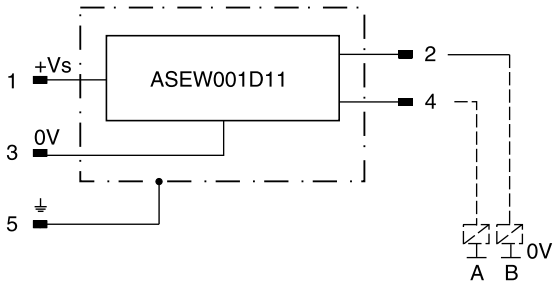

Signal	Output A (pin 4)	Output B (pin 2)
neutral	closed	closed
	open	closed
	closed	open

The neutral position is monitored. The signal changes after less than 10 % of the spool stroke.

Electrical monitor switch

Protection class		IP65 in accordance with EN 60529 (with correctly mounted plug-in connector)
Ambient temperature	[°C]	0-70
Supply voltage/ripple	[V]	18...42, ripple < 10 % eff.
Current consumption without load	[mA]	< 30
Max. output current per channel, ohmic	[mA]	400
Min. output load per channel, ohmic	[kOhm]	100
Max. output drop at 0.2 A	[V]	< 1.1
Max. output drop at 0.4 A	[V]	< 1.6
EMC		EN61000-6-2, EN61000-6-4
Max. tol. ambient field strength	[A/m]	1200
Min. distance to next AC solenoid	[m]	0.1
Interface		4+PE acc. IEC 61076-2-101 (M12)
Wiring min.	[mm²]	5 x 0.5 (AWG 20) overall braid shield
Wiring lenght max.	[m]	50

3

Code F0, M0
6 + PE acc. to EN 175201-804

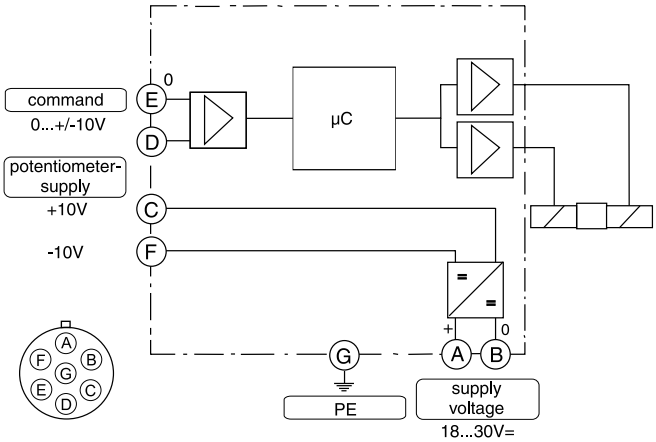

Code G0, S0
6 + PE acc. to EN 175201-804

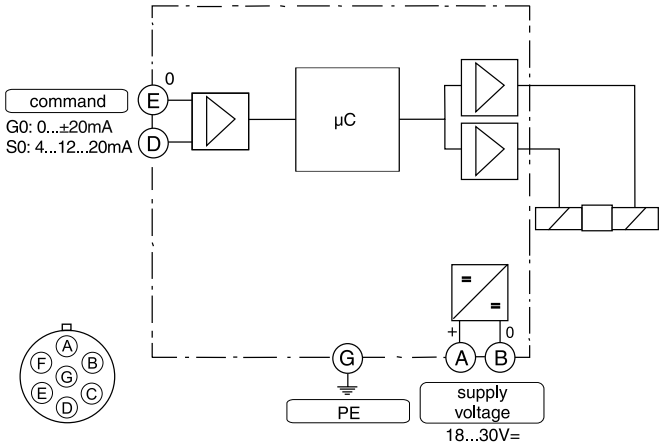

Code W5
11 + PE acc. to EN 175201-804

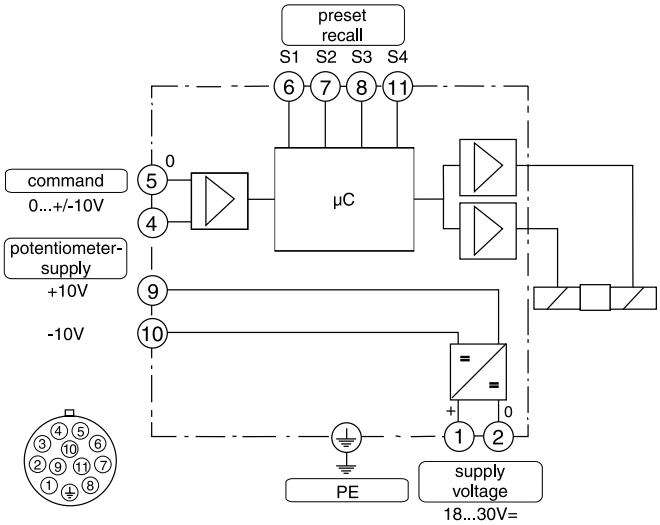

ProPxD interface program

The ProPxD software permits comfortable parameter setting for the module electronics. Via the clearly arranged entry mask the parameters can be noticed and modified. Storage of complete parameter sets is possible as well as printout or record as a text file for further documentation. Stored parameter sets may be loaded anytime and transmitted to other valves. Inside the electronics a non-volatile memory stores the data with the option for recalling or modification.

The PC software can be downloaded free of charge at www.parker.com/euro_hcd – see page “Support".

Features

- Comfortable editing of all parameters
- Depiction and documentation of parameter sets
- Storage and loading of optimized parameter adjustments
- Executable with all actual Windows® operating systems from Windows® 95 upwards
- Plain communication between PC and electronics via serial interface RS-232

The parametrizing cable may be ordered under item no.40982923.

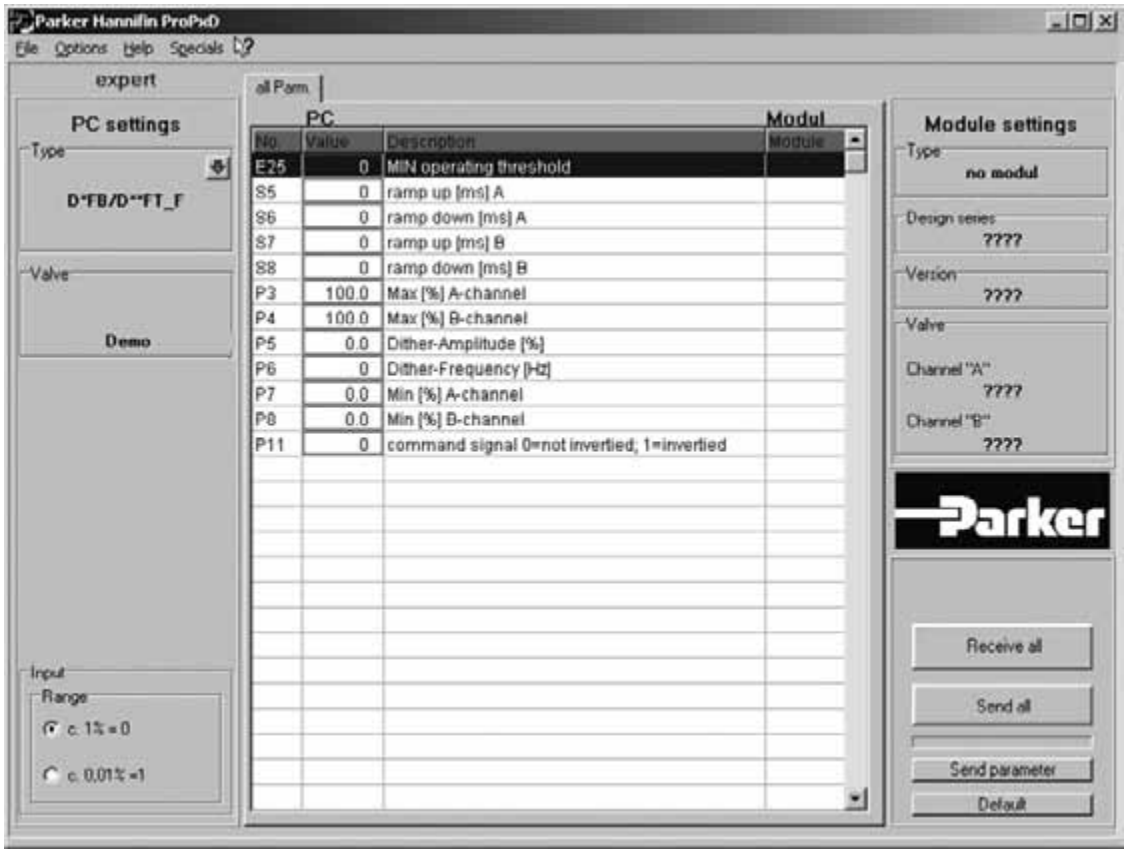

3

Pilot oil inlet (supply) and outlet (drain)

○ open, ● closed

Pilot oil Inlet	Pilot oil Drain	B	C
internal	external	○	●
external	external	●	●
internal	internal	○	○
external	internal	●	○

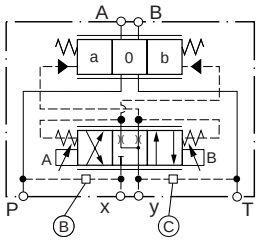

D31FBB/E

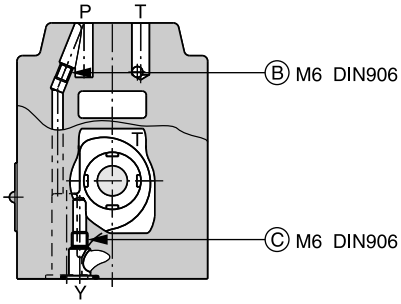

(drawn offset)

D31FBR

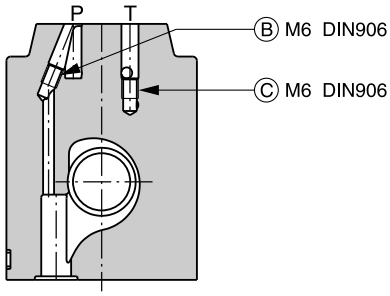

D41FBB/E

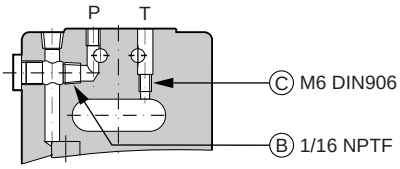

D41FBR

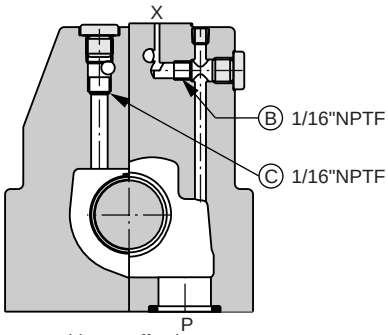

(drawn offset)

D41FBZ

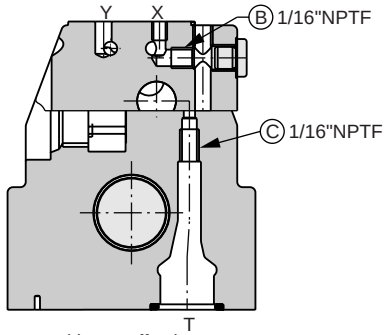

(drawn offset)

D91FBB/E

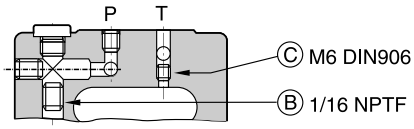

D91FBR

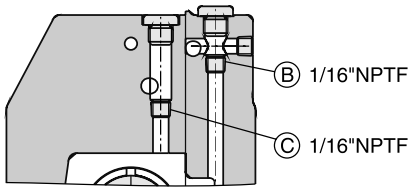

(drawn offset)

D91FBZ

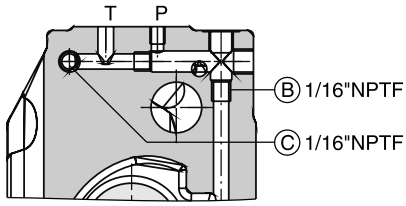

D111FBB/E

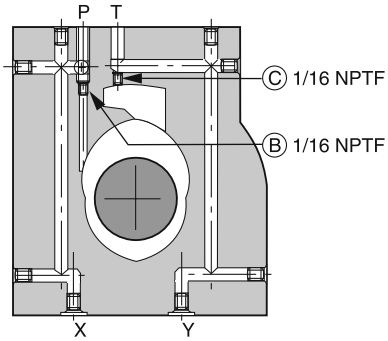

D111FBR

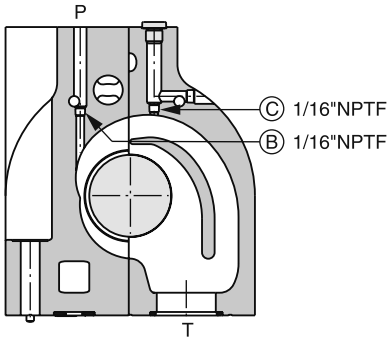

(drawn offset)

D111FBZ

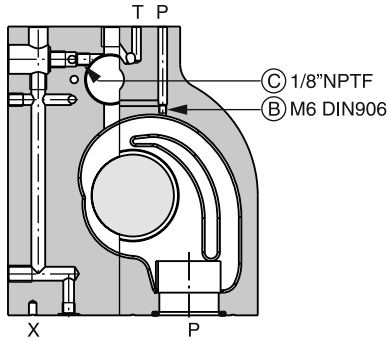

(drawn offset)

D31FB

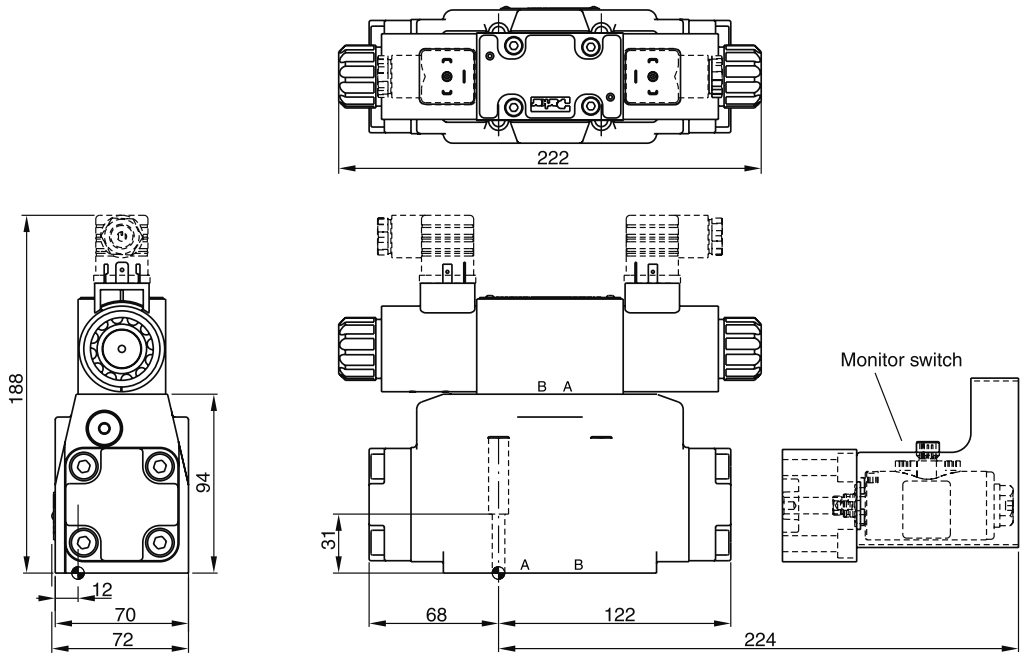

Regenerative and hybrid function with additional plate "H10-1666L / H10-1662 / A10-1664 / A10-1665L", see chapter 12.

Surface finish	Kit			Kit
R_{max}6.3 ▱ 0.01/100	BK385	4x M6x40 ISO 4762-12.9	13.2 Nm ±15 %	NBR: SK-D31FB FPM: SK-D31FB-V

D41FB

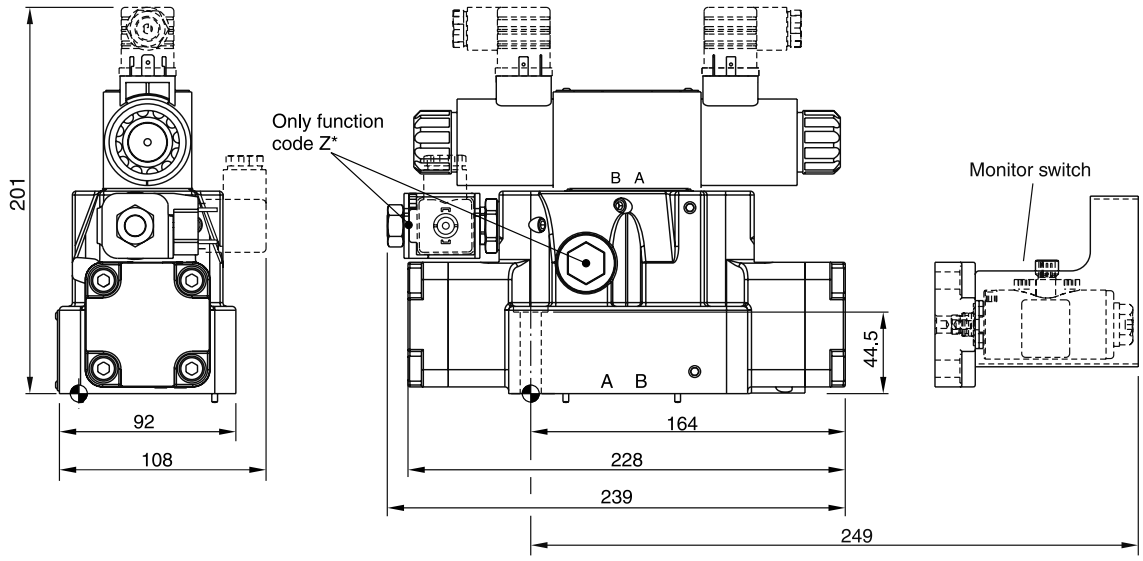

Surface finish	Kit			Kit
R_{max}6.3 ▱ 0.01/100	BK320	2x M6x55 4x M10x60 ISO 4762-12.9	13.2 Nm ±15 % 63 Nm ±15 %	NBR: SK-D41FB FPM: SK-D41FB-V

3

D91FB

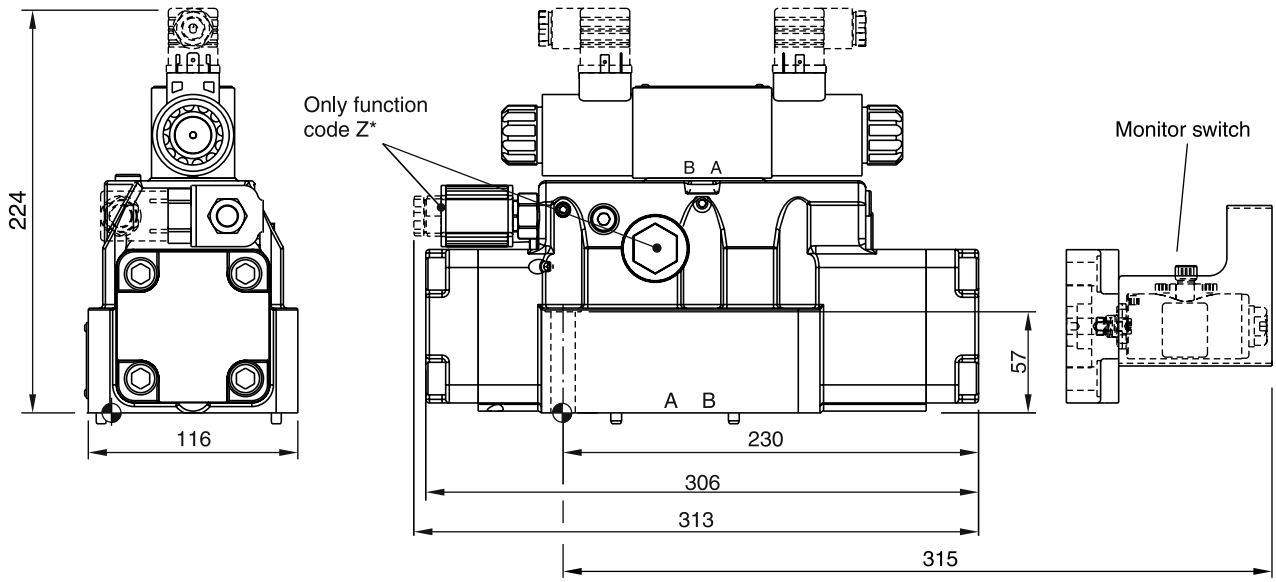

Surface finish	Kit			Kit
R_{max}6.3 / 0.01/100	BK360	6x M12x75 ISO 4762-12.9	108 Nm ±15 %	NBR: SK-D91FB FPM: SK-D91FB-V

D111FB

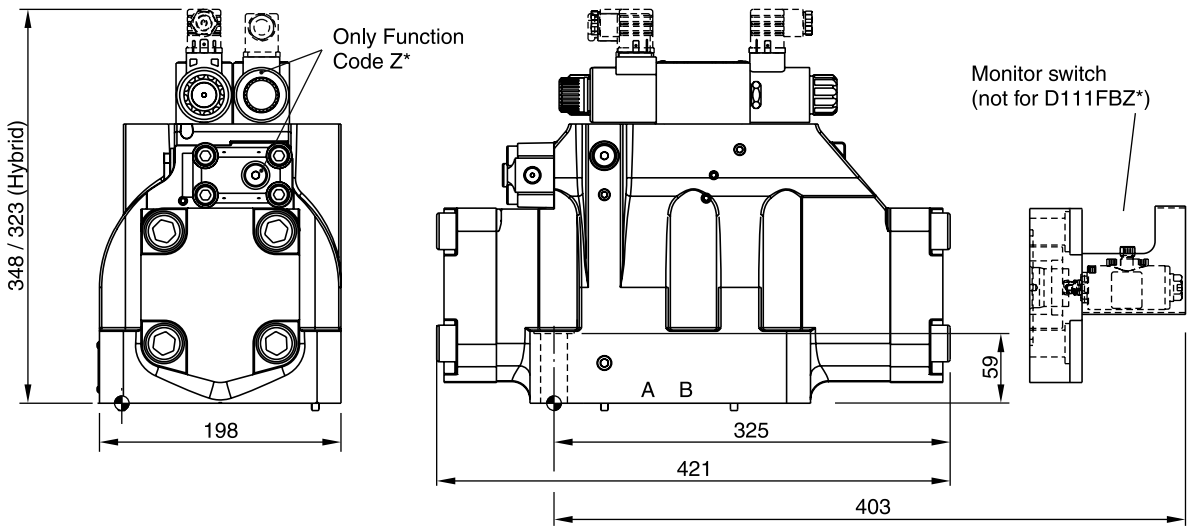

Surface finish	Kit			Kit
R_{max}6.3 / 0.01/100	BK386	6x M20x90 ISO 4762-12.9	517 Nm ±15 %	NBR: SK-D111FB FPM: SK-D111FB-V

Dimension with DT04-2P "Deutsch" Connector

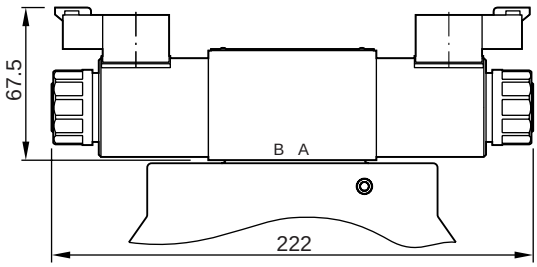

3

D31FB OBE

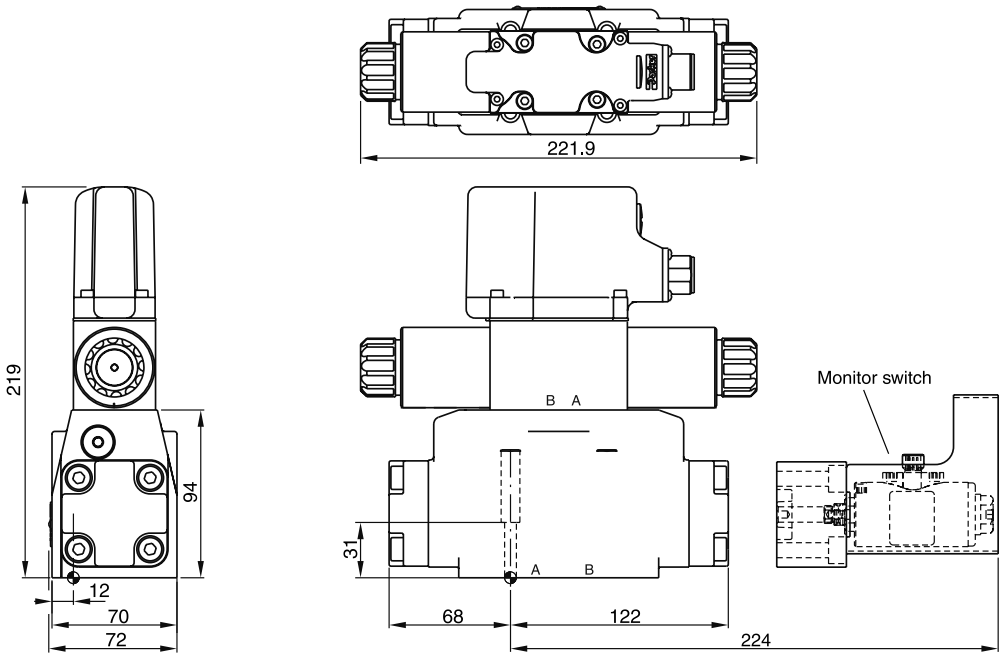

Regenerative and hybrid function with additional plate "H10-1666L / H10-1662 / A10-1664 / A10-1665L", see chapter 12.

Surface finish	Kit			Kit
R_{max}6.3 / 0.01/100	BK385	4x M6x40 ISO 4762-12.9	13.2 Nm ±15 %	NBR: SK-D31FB FPM: SK-D31FB-V

D41FB OBE

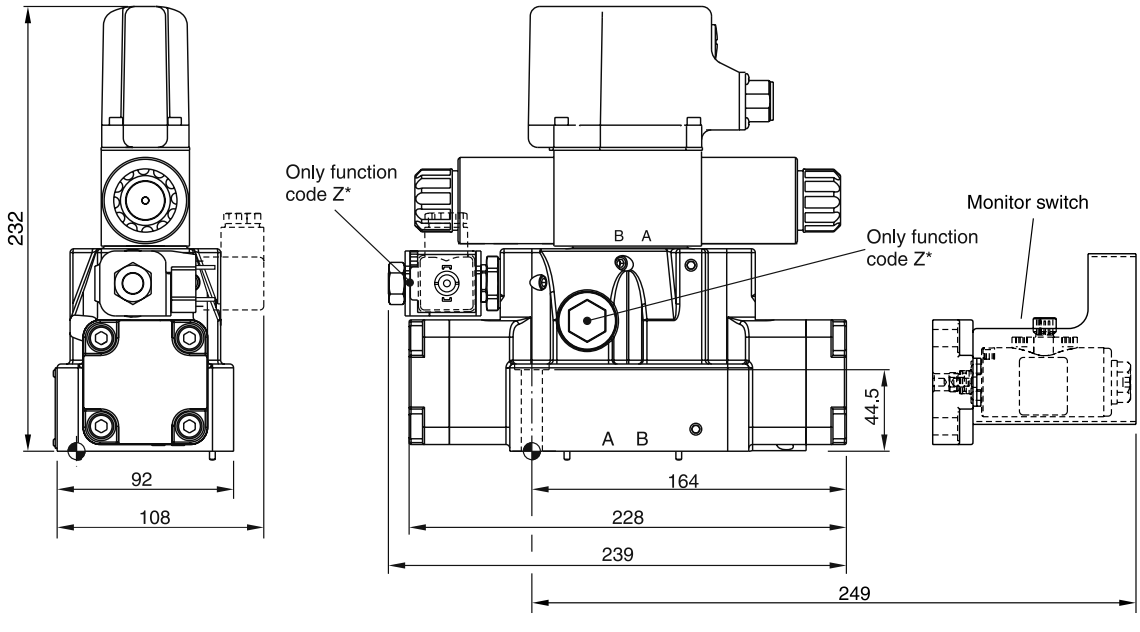

Surface finish	Kit			Kit
R_{max}6.3 / 0.01/100	BK320	2x M6x55 4x M10x60 ISO 4762-12.9	13.2 Nm ±15 % 63 Nm ±15 %	NBR: SK-D41FB FPM: SK-D41FB-V

D91FB OBE

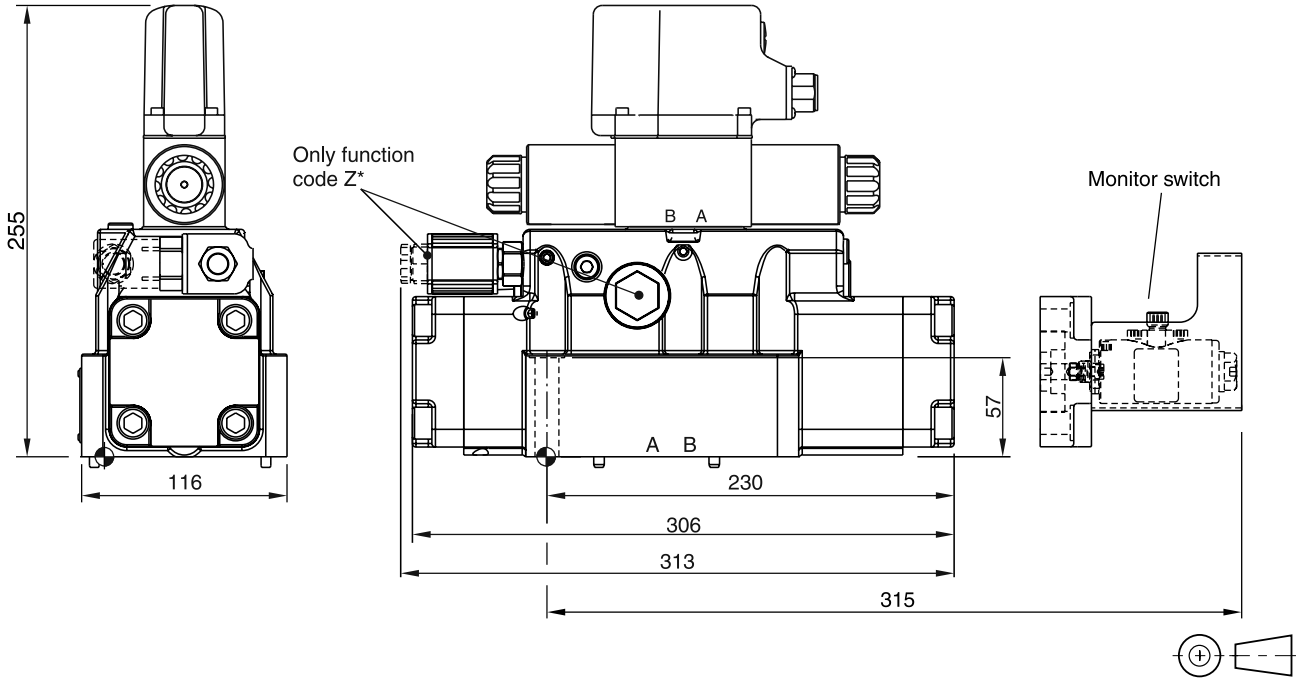

Surface finish	Kit			Kit
R_{max}6.3 ▱ 0.01/100	BK360	6x M12x75 ISO 4762-12.9	108 Nm ±15 %	NBR: SK-D91FB FPM: SK-D91FB-V

D111FB OBE

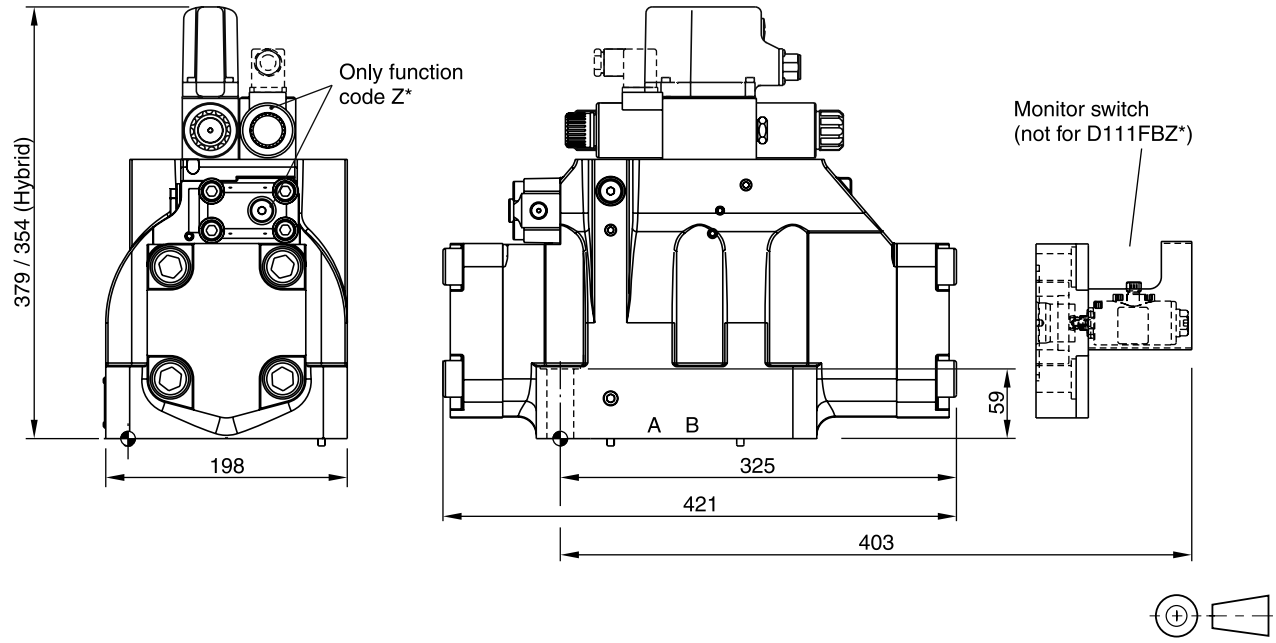

Surface finish	Kit			Kit
R_{max}6.3 ▱ 0.01/100	BK386	6x M20x90 ISO 4762-12.9	517 Nm ±15 %	NBR: SK-D111FB FPM: SK-D111FB-V

D_1FB UK.indd RH 29.08.2013

3

The proportional pressure reducing valves series D1FV are available with and without onboard electronics (OBE).

D1FV OBE

The digital onboard electronics is situated in a robust metal housing, which allows the usage under rough environmental conditions.

The nominal values are factory set. The cable for connection to a serial RS232 interface is available as accessory.

D1FV for external electronics

The parameters can be saved, changed and duplicated in combination with the digital power amplifier PWD00A-400. The value parameters can be edited with the common ProPxD software for both versions.

The D1FV values control the pressure in the A- or B-ports using the barometric feedback principle.

Valves with explosion proof solenoids EEx me II see catalogue HY11-3343.

Download: www.parker.com/euro_hcd - see “Literature”

Technical Features

- Barometric feedback
- 3 command options for D1FV OBE: ±10 V, 4...20 mA, ±20 mA
- High repeatability from valve to valve
- Low hysteresis
- Manual override
- Pressure stages 25 bar and 45 bar

D1FV

D1FV OBE

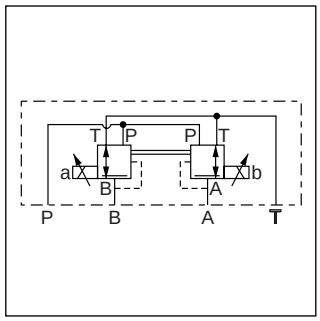

Function C

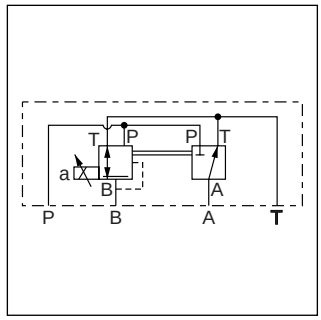

Function E

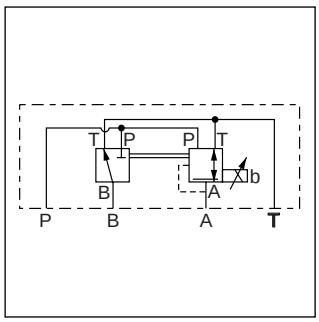

Function K

D1FV*3 OBE

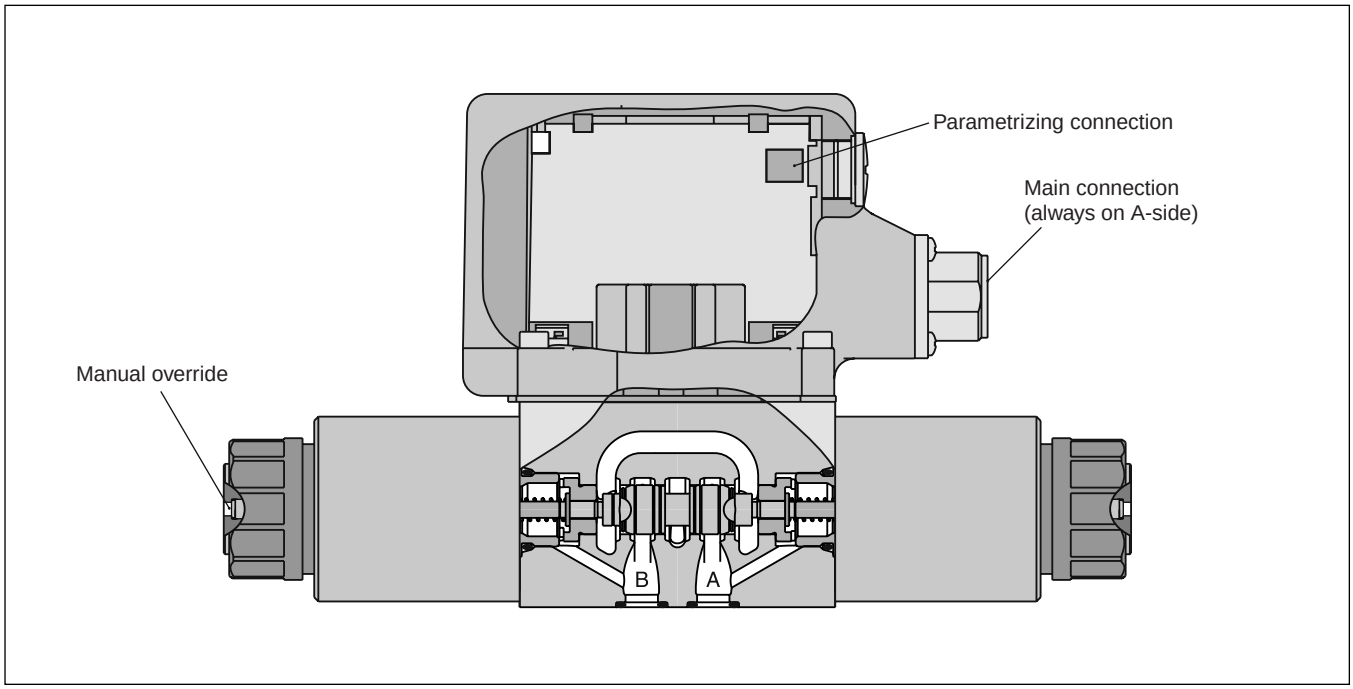

D1FV

D	1	F	V	E02			0		K		3	
Proportional pressure reducing valve	Size DIN NG06 CETOP 03 NFPA D03	Proportional control		Spool type	Pressure range	Control function		Seals	Solenoid 12 V / 2.2 A	Connector	Spool/ body design	Design series (not required for ordering)

Code	Pressure range
C	25 bar
D	45 bar

Code	Connector
W	Connector as per EN 175301-803
J	Connector DT04-2P "Deutsch"

Code	Control function
C	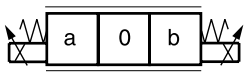
E	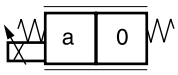
K	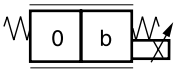

Code	Seals
N	NBR
V	FPM

D1FV OBE (with onboard electronics)

D	1	F	V	E02			0					3	
Directional control valve	Size DIN NG06 CETOP 03 NFPA D03	Proportional control		Spool type	Pressure range	Control function		Seals	Input signal	Electronic attachment		Spool/ body design	Design series (not required for ordering)

Code	Pressure range
C	25 bar
D	45 bar

Code	Control function
C	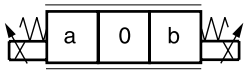
E	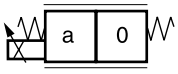
K	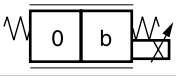

Spool position				
Code	Input signal [1]	Function	Port	Options
F0	0...+/-10 V	0...+10 V > P-A	6 + PE	Potentiometer supply
G0	0...+/-20 mA	0...+20 mA > P-A	6 + PE	—
M0	0...+/-10 V	0...+10 V > P-B	6 + PE	Potentiometer supply
S0	4...20 mA	12...20 mA > P-A	6 + PE	—
W5 [2]	0...+/-10 V 4...20 mA 0...+/-20 mA	0...+10 V > P-A 12...20 mA > P-A 0...+20 mA > P-A	11 + PE	Command channel & potentiometer supply

Code	Seals
N	NBR
V	FPM

Short delivery time for all variations

Please order connector separately, see chapter 3 accessories.
Parametrizing cable OBE → RS232, item no. 40982923

[1] Single solenoid always 0...+10 V respectively 4...20 mA.

[2] Factory set ±10 V on delivery.

D1FV UK.indd RH 29.08.2013

3

General		
Design		Direct operated proportional pressure reducing valve
Actuation		Proportional solenoid
Size		NG06/CETOP 03/NFPA D03
Mounting interface		DIN 24340 / ISO 4401 / CETOP RP121 / NFPA
Mounting position		unrestricted
Ambient temperature	[°C]	-20...+40
$MTTF_D$ value (OBE)	[years]	150 (75)
Weight (OBE)	[kg]	2.2 (2.9)
Vibration resistance	[g]	10 Sinus 5...2000 Hz acc. IEC 68-2-6 30 Random noise 20...2000 Hz acc. IEC 68-2-36 15 Shock acc. IEC 68-2-27
Hydraulic		
Max. operating pressure	[bar]	Ports P, A, B 350; Port T 185
Max. pressure drop PABT / PBAT	[bar]	350
Fluid		Hydraulic oil as per DIN 51524 ... 51535, other on request
Fluid temperature	[°C]	-20...+40
Viscosity permitted recommended	[cSt] / [mm^2/s] [cSt] / [mm^2/s]	20...380 30...80
Filtration		ISO 4406 (1999) 18/16/13
Max. flow	[l/min]	10
Min. primary pressure	[bar]	30
Static / Dynamic		
Hysteresis	[%]	<4
Temperature drift solenoid current	[%/K]	<0.02
Electrical characteristics		
Duty ratio	[%]	100 ED; CAUTION: coil temperature up to 150 °C possible
Protection class		Standard (as per EN175301-803) IP65 in accordance with EN60529 (with correctly mounted plug-in connector); DT04-2P “Deutsch“ IP69K (with correctly mounted plug-in connector)
Supply voltage	[V]	12
Current consumption	[A]	2.2
Resistance	[Ohm]	4.4
Solenoid connection		Connector as per EN 175301-803 (code W), DT04-2P “Deutsch“ connector (code J). Solenoid identification as per ISO 9461.
Wiring min.	[mm^2]	3x1.5 (AWG 16) overall braid shield (code W), "Deutsch" connector DP4 2 Pin (code J)
Wiring lenght max.	[m]	50 recommended

With electrical connections the protective conductor (PE ⏚) must be connected according to the relevant regulations.

Electrical characteristics OBE		
Duty ratio	[%]	100 ED; CAUTION: coil temperature up to 150 °C possible
Protection class		IP65 in accordance with EN 60529 (plugged and mounted)
Supply voltage/ripple DC	[V]	18...30, ripple < 5 % eff., surge free
Current consumption max.	[A]	2.0
Pre fusing medium lag	[A]	2.5
Input signal		
Codes F0 & W5 voltage	[V]	+10...0...-10, ripple < 0.01 % eff., surge free, Ri = 100 kOhm, 0...+10 V ⇒ P -> A
Codes M0 voltage	[V]	+10...0...-10, ripple < 0.01 % eff., surge free, Ri = 100 kOhm, 0...+10 V ⇒ P -> B
Codes S0 & W5 current	[mA]	4...12...20, ripple < 0.01 % eff., surge free, Ri = 200 Ohm, 12...20 mA ⇒ P -> A < 3.6 mA = enable off, > 3.8 mA = enable on (acc. to NAMUR NE43)
Code G0	[mA]	+20...0...-20, ripple < 0.01 % eff., surge free, Ri = 200 Ohm, 0...+20 mA ⇒ P -> A
Differential input max.		
Codes F0, G0, M0 & S0	[V]	30 for terminal D and E against PE (terminal G) 11 for terminal D and E against 0V (terminal B)
Code W5	[V]	30 for terminal 4 and 5 against PE (terminal PE) 11 for terminal 4 and 5 against 0V (terminal 2)
Channel recall signal	[V]	0...2.5: off / 5...30: on / Ri = 100 kOhm
Adjustment ranges Min	[%]	0...50
Adjustment ranges Max	[%]	50...100
Adjustment ranges Ramp	[s]	0...32.5
Interface		RS 232, parametrizing connection 5pole
EMC		EN 61000-6-2, EN 61000-6-4
Central connection		
Codes F0, G0, M0 & S0		6 + PE acc. to EN 175201-804
Code W5		11 + PE acc. to EN 175201-804
Wiring min.		
Codes F0, G0, M0 & S0	[mm²]	7 x 1.0 (AWG16) overall braid shield
Code W5	[mm²]	11 x 1.0 (AWG16) overall braid shield
Wiring length max.		50

Flow characteristics

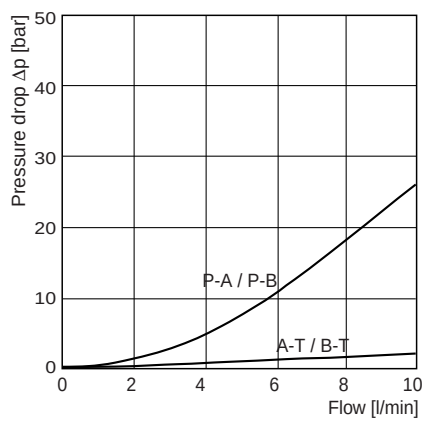

All characteristic curves measured with HLP46 at 50 °C.

3

Code F0, M0
6 + PE acc. to EN 175201-804

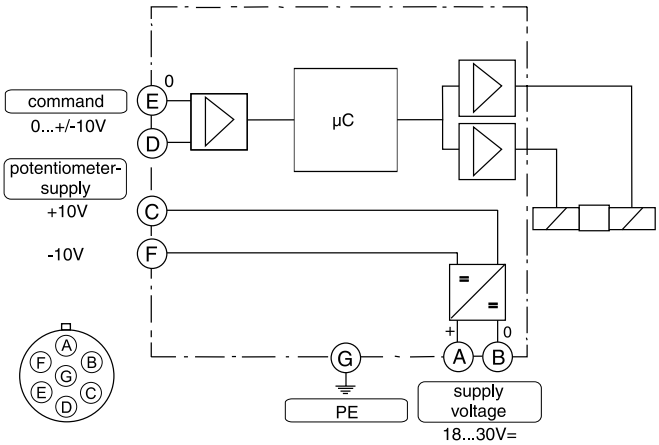

Code G0, S0
6 + PE acc. to EN 175201-804

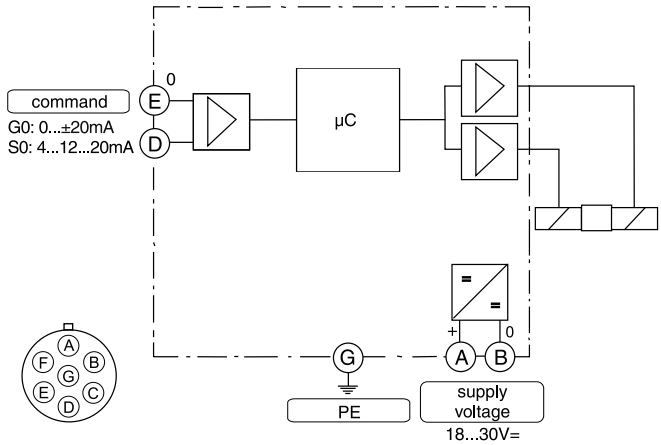

Code W5
11 + PE acc. to EN 175201-804

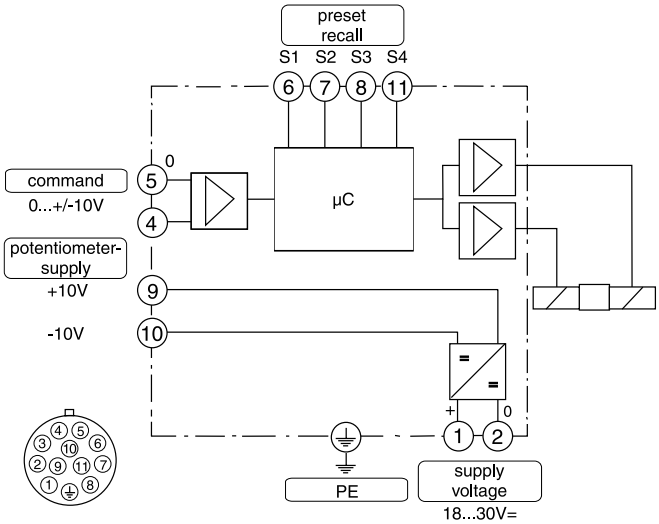

ProPxD interface program

The ProPxD software permits comfortable parameter setting for the module electronics. Via the clearly arranged entry mask the parameters can be noticed and modified. Storage of complete parameter sets is possible as well as printout or record as a text file for further documentation. Stored parameter sets may be loaded anytime and transmitted to other valves. Inside the electronics a non-volatile memory stores the data with the option for recalling or modification.

The PC software can be downloaded free of charge at www.parker.com/euro_hcd – see page “Support".

Features

- Comfortable editing of all parameters
- Depiction and documentation of parameter sets
- Storage and loading of optimized parameter adjustments
- Executable with all actual Windows® operating systems from Windows® 95 upwards
- Plain communication between PC and electronics via serial interface RS-232

The parametrizing cable may be ordered under item no.40982923.

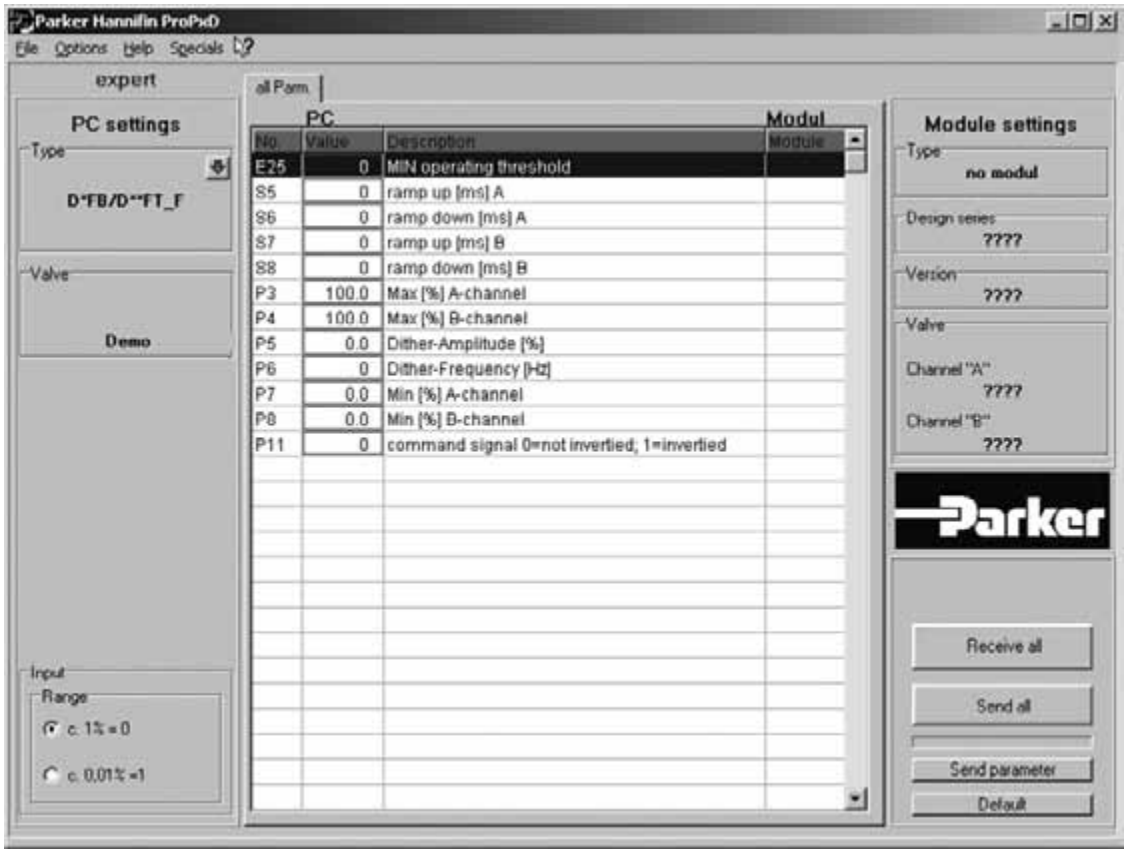

3

D1FV*C

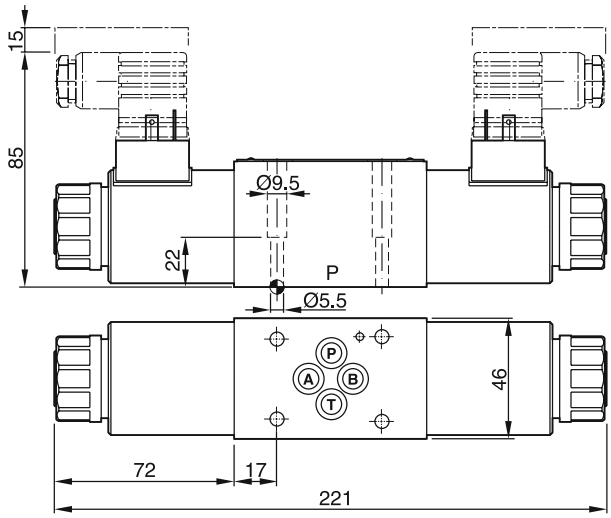

D1FV*E

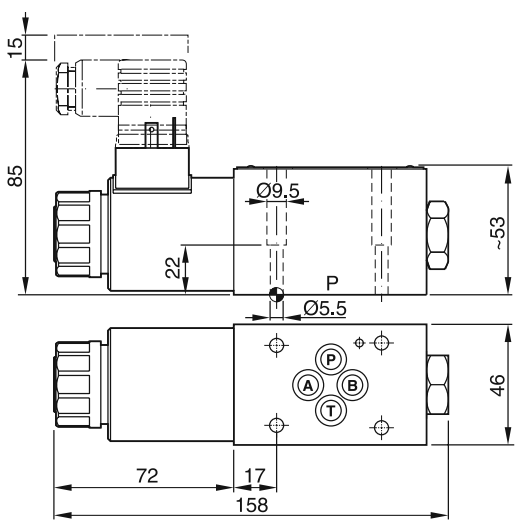

D1FV*K

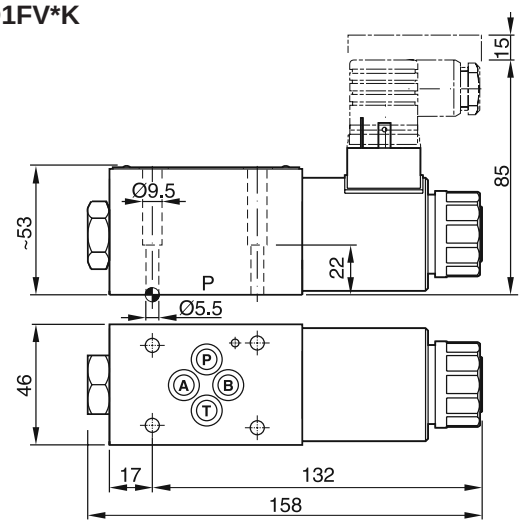

D1FV*C with DT04-2P "Deutsch" connector
(only C style shown)

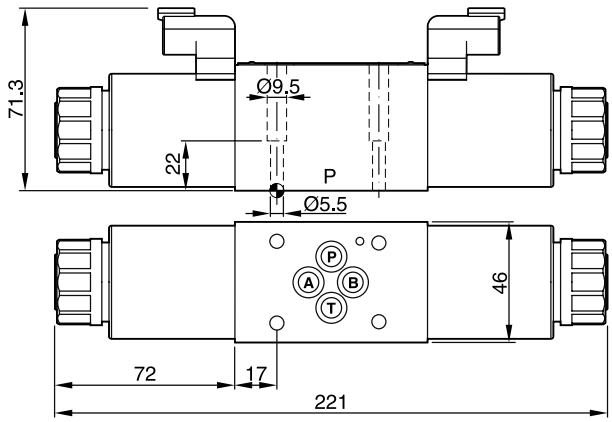

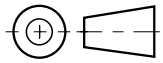

Surface finish	Kit			Kit NBR
R_{max}6.3 ▱ 0.01/100	BK375	4x M5x30 ISO 4762-12.9	7.6 Nm ±15 %	SK-D1FB

D1FV UK.indd RH 29.08.2013

D1FV*C OBE

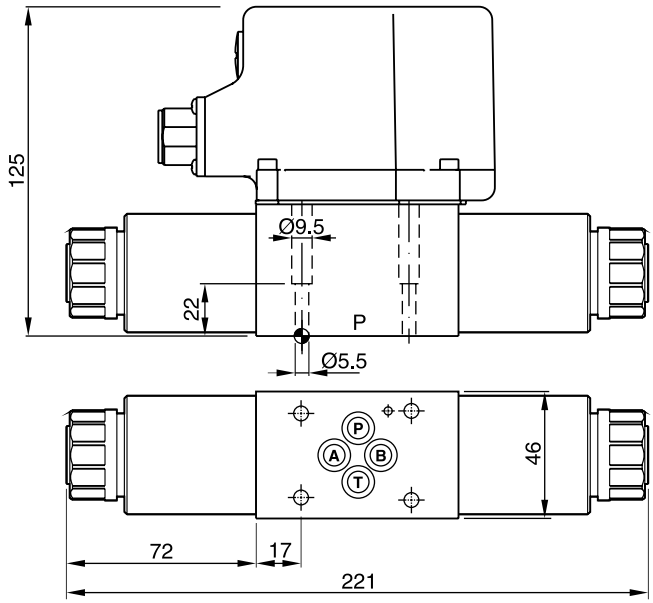

D1FV*E OBE

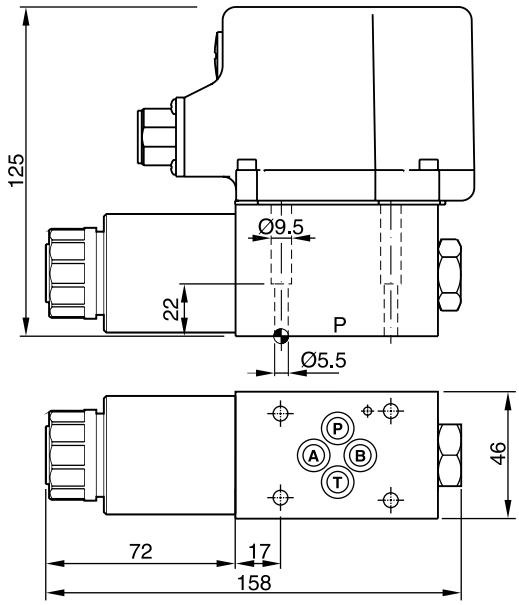

D1FV*K OBE

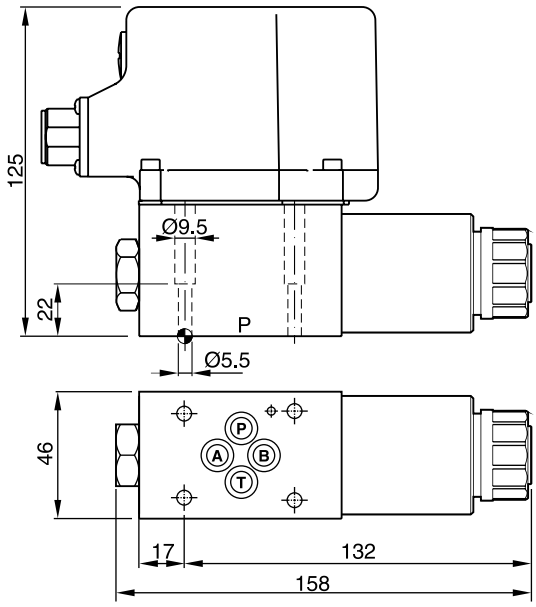

Surface finish	Kit			Kit NBR
R_{max}6.3 ▱ 0.01/100	BK375	4x M5x30 ISO 4762-12.9	7.6 Nm ±15 %	SK-D1FB

D1FV UK.indd RH 29.08.2013

3

The pilot operated proportional DC valves series D*1FH are high-performance valves with electronic spool position feedback. These valves are available in sizes NG10 to NG32 (CETOP 05 to CETOP 10).

The D*1FH series is available in 5 sizes:

D31FH NG10 (CETOP 05)
D41FH NG16 (CETOP 07)
D81FP NG25 (CETOP 08) for port diam. up to 26 mm
D91FP NG25 (CETOP 08) for port diam. up to 32 mm
D111FP NG32 (CETOP 10)

Typical applications are:

High precision and reproducible adjustment of flow rates, applications in rapid / creep speed with spool position monitoring for presses and dynamic position and p/Q closed loop systems.

D41FH

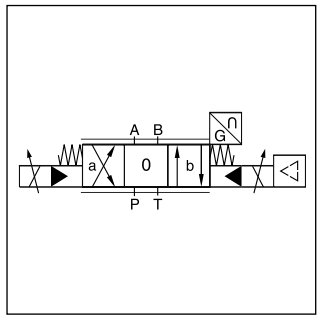

Technical features

- Very low hysteresis
- High repeatability
- Spool position feedback
- Center position monitoring optional

CE

D31FH

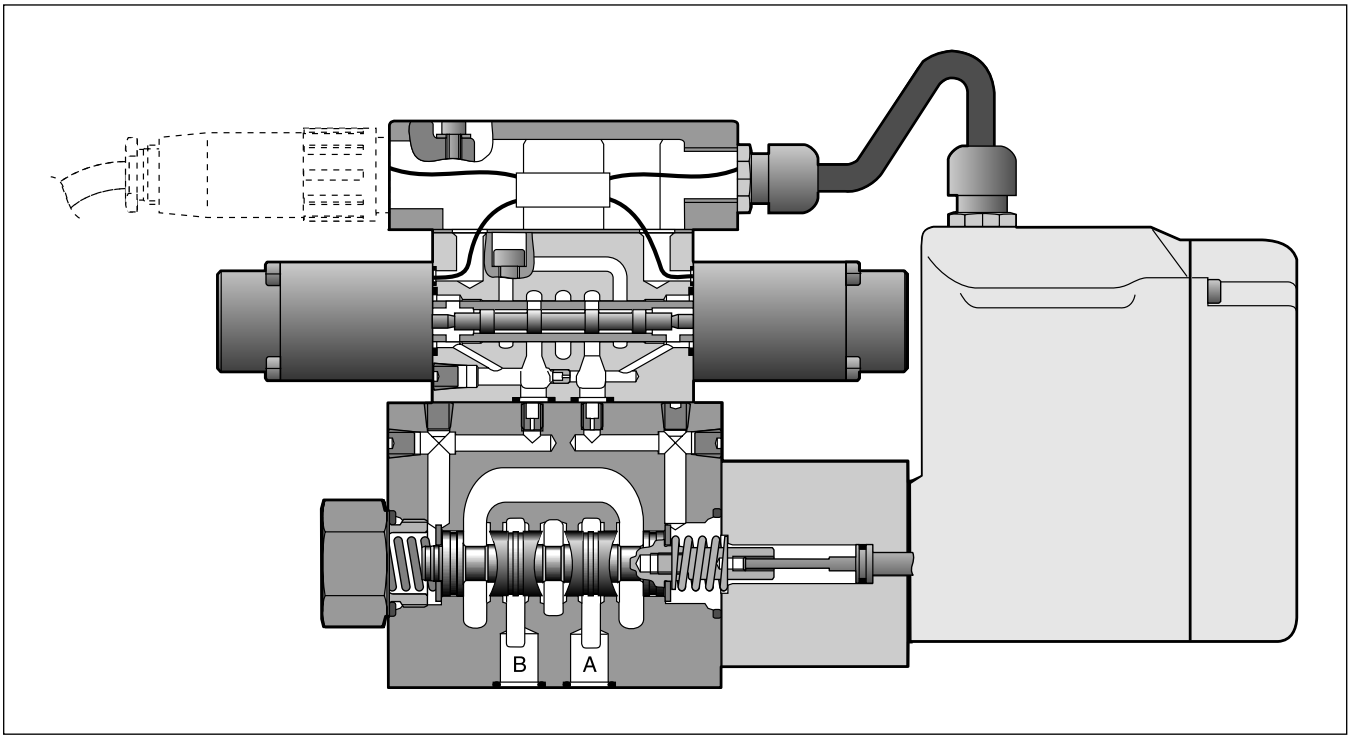

D		1	F	H				N		0		
Directional control valve	Size	NG06 pilot	Proportional control	High repeatability	Spool type	Flow	Pilot connection	Seal NBR (other seal compound on request)	Command signal	Electronic options	Valve option	Design series (not required for ordering)

Code	Size
3	NG10 / CETOP 05
4	NG16 / CETOP 07
8	NG25 / CETOP 08
9 [1]	NG25 / CETOP 08
11	NG32 / CETOP 10

Code	Spool type
	overlap
E01	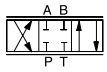
E02	
B31	$Q_B = Q_A/2$ 
B32	$Q_B = Q_A/2$ 

Code	Valve option
0	Standard
8	Monitor switch

Code	Signal	Function
B	0...±10 V standard	0...+10 V P -> B
E	0...±20 mA	0...+20 mA P -> B
S	4...20 mA	12...20 mA P -> A

Code	Inlet	Drain
1	Internal	External
2	External	External
4	Internal	Internal
5	External	Internal

Code	Flow [l/min] at Δp = 5 bar per metering edge				
	D31	D41	D81	D91	D111
A	55	—	—	—	—
B	—	105	—	—	—
C	80	140	—	—	—
E	—	190	250	250	—
F	—	240	310	310	—
H	—	—	400	400	500
L	—	—	—	—	1000

Short delivery time for all variations

Please order connector separately - see chapter 3 accessories.

[1] With enlarged connections Ø 32 mm.

D_1FH UK.indd RH 29.08.2013

3

General					
Design		Pilot operated DC valve with onboard electronics			
Actuation		Proportional solenoid			
Size		**NG10 (CETOP 05)**	**NG16 (CETOP 07)**	**NG25 (CETOP 08)**	**NG32 (CETOP 10)**
Mounting interface		DIN 24340 / ISO 4401 / CETOP RP121 / NFPA			
Mounting position		unrestricted			
Ambient temperature	[°C]	-20...+60			
$MTTF_D$ value	[years]	50			
Weight	[kg]	8.1	11.6	20.7	62
Hydraulic					
Max. operating pressure	[bar]	Ports P, A, B, T, X 350; Port Y 10			
Fluid		Hydraulic oil as per DIN 51524 ... 51535, other on request			
Fluid temperature	[°C]	-20...+60			
Viscosity					
permitted	[cSt] / [mm²/s]	20...380			
recommended	[cSt] / [mm²/s]	30...80			
Filtration		ISO 4406 (1999) 18/16/13			
Nominal flow at Δp=5 bar per control edge [1]	[l/min]	55/80	105/140/190/240	250/310/400	500/1000
Leakage at 100 bar	[ml/min]	100	200	600	1000
Pilot supply pressure	[bar]	20-350 (optimal dynamics at 50)			
Pilot flow	[l/min]	<1.2			
Pilot flow, step response	[l/min]	2.0	4.1	9.0	18.0
Static / Dynamic					
Step response at 100 % step	[ms]	25	45	65	150
Hysteresis	[%]	<0.1			
Sensitivity	[%]	<0.05			
Electrical characteristics					
Duty ratio	[%]	100			
Protection class		IP65 in accordance with EN 60529 (with correctly mounted plug-in connector)			
Supply voltage/ripple	[V]	18 ... 30, ripple <5 % eff., surge free			
Current consumption max.	[A]	2.0			
Input signal [2]					
Voltage	[V]	10...0...-10, ripple <0.01 % eff., surge free, 0...+10 V P—>B			
Impedance	[kOhm]	100			
Current	[mA]	20...0...-20, ripple <0.01 % eff., surge free, 0...+20 mA P—>B			
Impedance	[Ohm]	500			
Current	[mA]	4...12...20, ripple <0.01 % eff., surge free, 12...20 mA P—>A			
Impedance	[Ohm]	500			
Differential input max.	[V]	30 for terminal D and E against PE			
Pre-fusing	[A]	2.5 medium lag			
EMC		EN 50081-2 / EN50082-2			
Coil insulation class		F (155 °C)			
Electrical connection		6+PE acc. EN 175201-804			
Wiring min.	[mm²]	7x1.0 (AWG 18) overall braid shield			
Wiring lenght max.	[m]	50			

[1] Flow rate for different Δp per control edge: $Q_x = Q_{Nom.} \cdot \sqrt{\frac{\Delta p_x}{\Delta p_{Nom.}}}$

[2] Inverse polarity on request

Control system flow chart, valve electronics

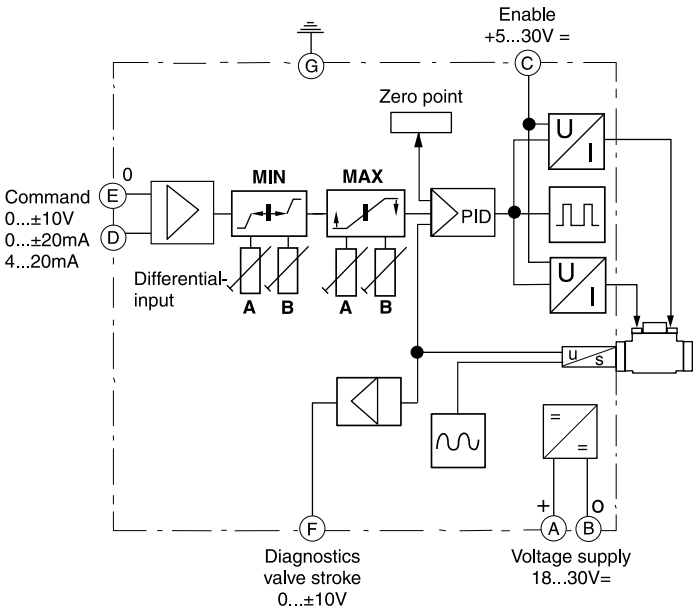

Wiring

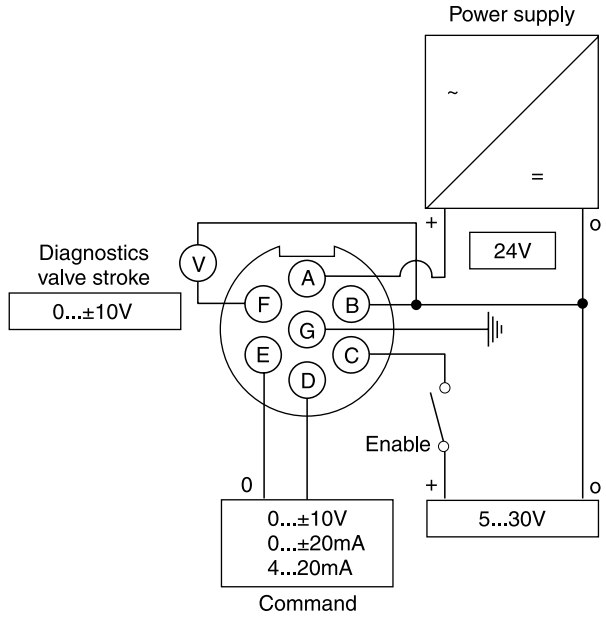

Enable input

The power stage is activated via pin C (enable input).

Supply voltage monitoring

If the minimal supply voltage drops below, it is internally monitored and displayed via the status LED.

Control monitoring

A control error is indicated if there is an error in the control circuit of the valve.

Display is green	Normal operation
Display off	Supply voltage is outside the permissible range of 18 ... 30 V
Display is red	Control error

Arrangement of the potentiometers

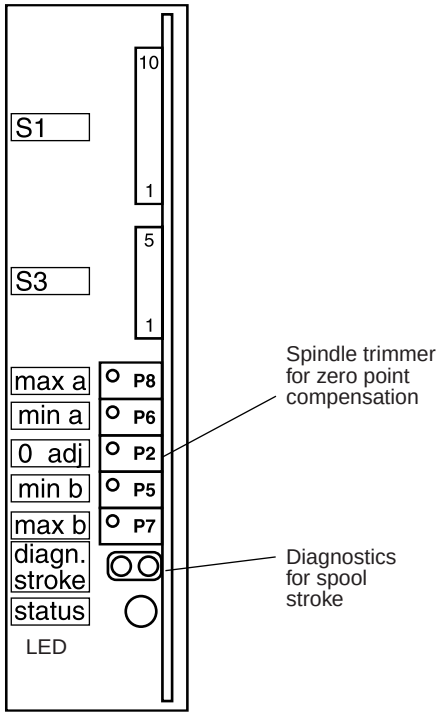

3

Flow characteristics

at Δp = 5 bar per metering edge

Spool types **E01, E02**

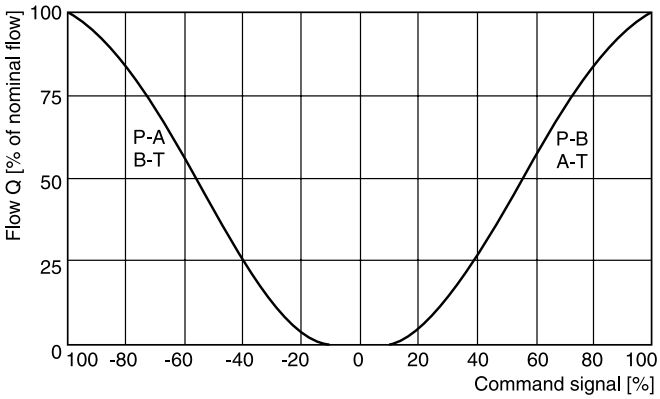

Spool types **B31, B32**

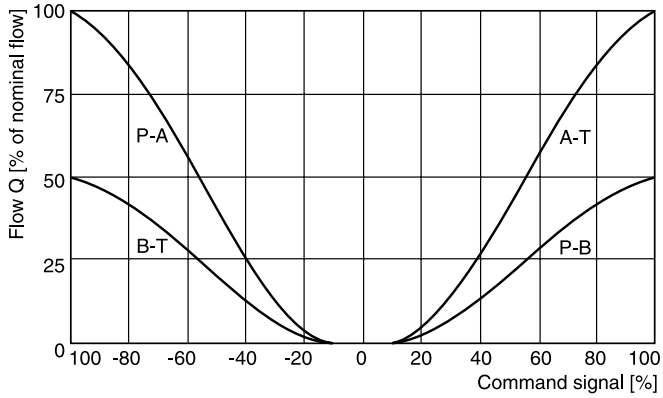

All characteristic curves measured with HLP46 at 50 °C.

Electrical monitor switch

Electrical monitor switch		
Protection class		IP65 in accordance with EN 60529 (with correctly mounted plug-in connector)
Ambient temperature	[°C]	0-70
Supply voltage/ripple	[V]	18...42, ripple <10 % eff.
Current consumption without load	[mA]	<30
Max. output current per channel, ohmic	[mA]	400
Min. output load per channel, ohmic	[kOhm]	100
Max. output drop at 0.2 A	[V]	<1.1
Max. output drop at 0.4 A	[V]	<1.6
EMC		EN 50081-1 / EN50082-2
Max. tol. ambient field strength	[A/m]	1200
Min. distance to next AC solenoid	[m]	0.1
Interface		4+PE acc. IEC 61076-2-101 (M12)
Wiring min.	[mm²]	4x0.5 (AWG 20) overall braid shield
Wiring lenght max.	[m]	50

Monitor switch M12x1 pin assignment

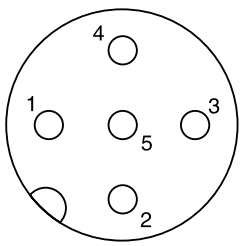

1 + Supply 18...42 V
2 output B (normally closed)
3 0 V
4 output A (normally closed)
5 Earth ground

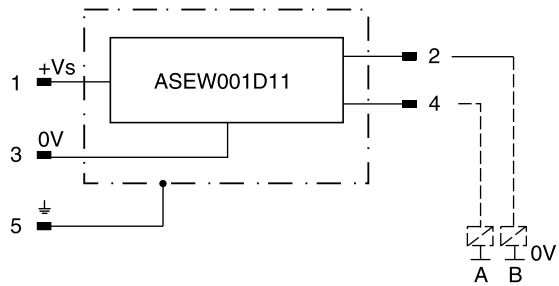

Signal	Output A (pin 4)	Output B (pin 2)
neutral	closed	closed
	open	closed
	closed	open

The neutral position is monitored. The signal changes after less than 10 % of the spool stroke.

Pilot oil inlet (supply) and outlet (drain)

○ open, ● closed

Pilot oil Inlet	Pilot oil Drain	B	C
internal	external	○	●
external	external	●	●
internal	internal	○	○
external	internal	●	○

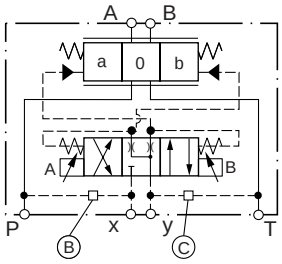

D31FH

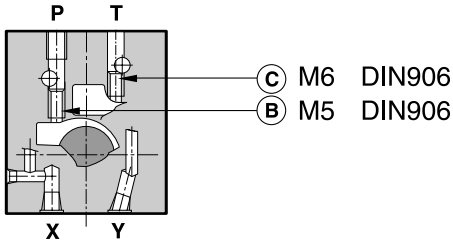

D41FH

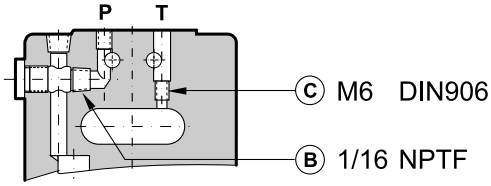

D81/91FH

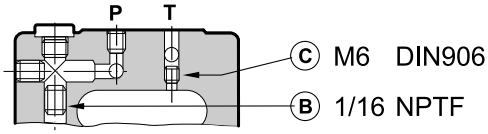

D111FH

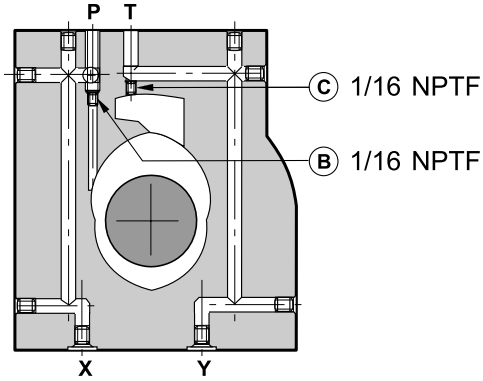

3

D31FH

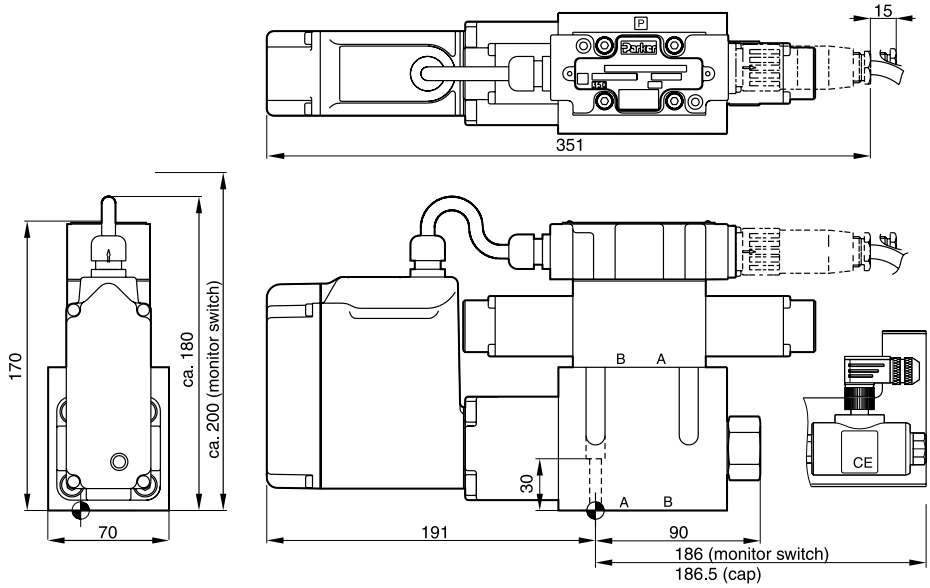

Surface finish	Kit			Kit NBR
R_{max}6.3 ⏥ 0.01/100	BK385	4x M6x40 ISO 4762-12.9	13.2 Nm ±15 %	SK-D31FHN

D41FH

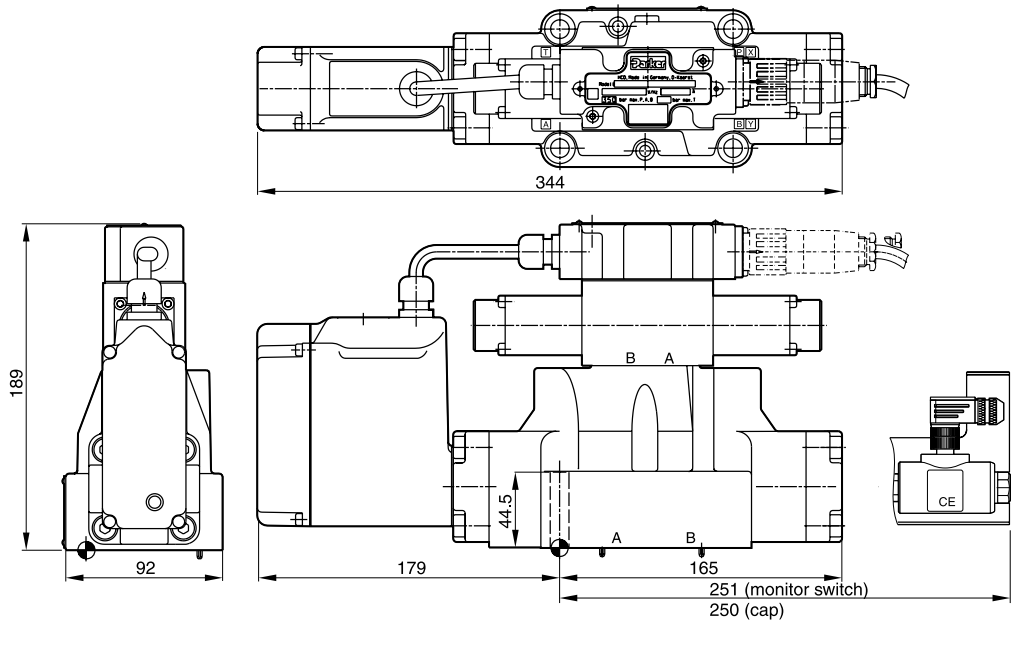

Surface finish	Kit			Kit NBR
R_{max}6.3 ⏥ 0.01/100	BK320	2x M6x55 4x M10x60 ISO 4762-12.9	13.2 Nm ±15 % 63 Nm ±15 %	SK-D41FHN

D_1FH UK.indd RH 29.08.2013

D81/91FH

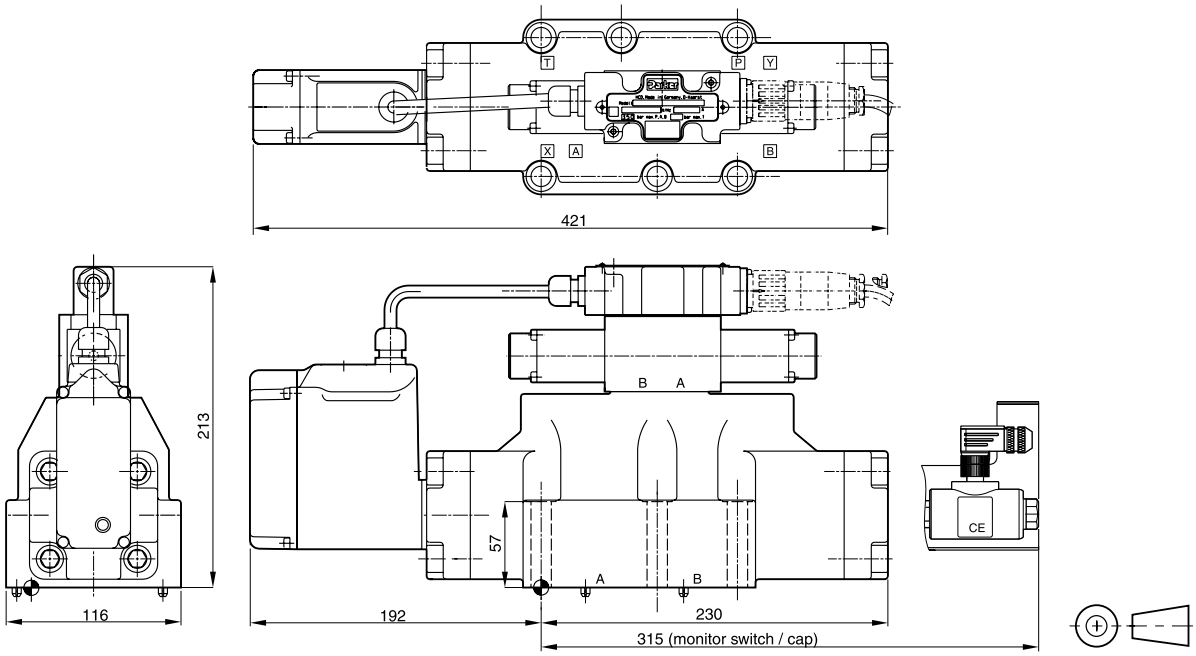

Surface finish	Kit			Kit NBR
R_{max}6.3 ▱ 0.01/100	BK360	6x M12x75 ISO 4762-12.9	108 Nm ±15 %	SK-D91FHN

D111FH

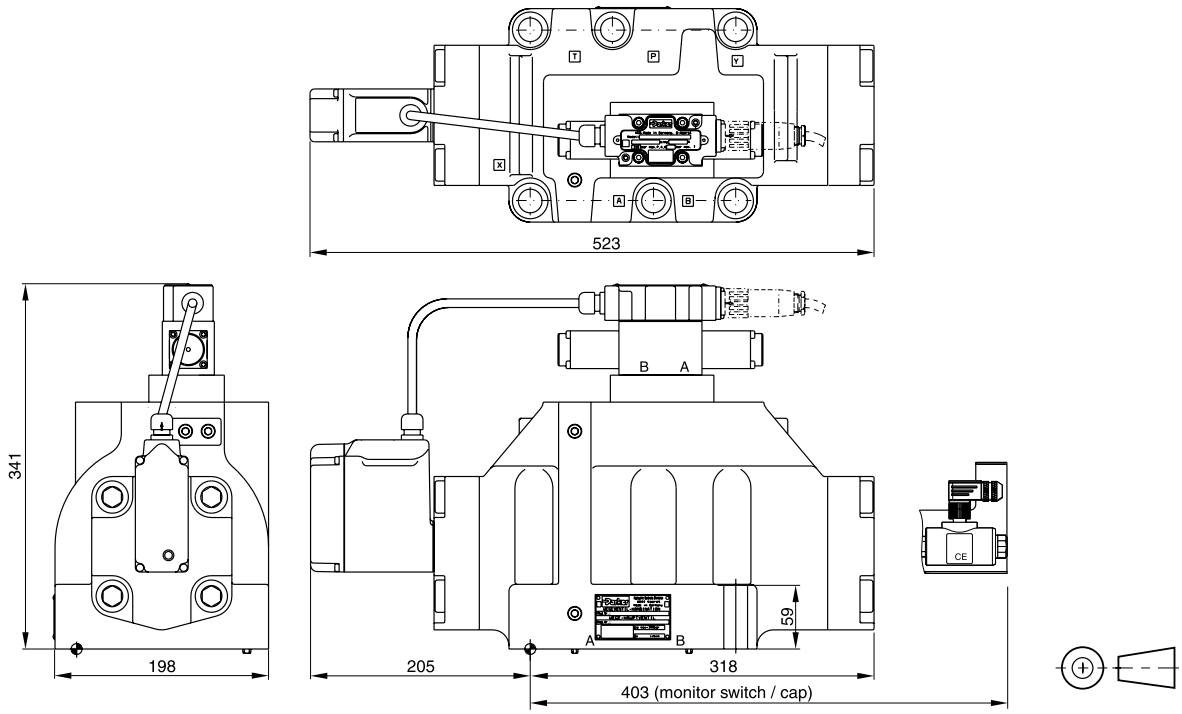

Surface finish	Kit			Kit NBR
R_{max}6.3 ▱ 0.01/100	BK386	6x M20x90 ISO 4762-12.9	517 Nm ±15 %	SK-D111FHN

3

The series of pilot operated proportional valves D*1FE is designed for high precision applications that require a safe middle position of the main spool at power down.

The pilot is a 3-position valve with an overlapped middle position. This ensures that the main stage spring pushes the spool into the middle position at power down without an unintended jerk of the actuator.

The D*1FE series is available in 5 sizes:

D31FE NG10 (CETOP 05)
D41FE NG16 (CETOP 07)
D81FE NG25 (CETOP 08) for port diam. up to 26 mm
D91FE NG25 (CETOP 08) for port diam. up to 32 mm
D111FE NG32 (CETOP 10)

The innovative integrated regenerative function in the A-line (optional) allows new energy saving circuits with differential cylinders. The hybrid version can switch between regenerative mode and standard mode at any time.

Technical features

- High dynamics
- High flow
- Defined spool positioning at power-down
- Onboard electronics
- Centre position monitoring optional
- Energy saving A-regeneration optionally integrated
- Switchable hybrid version

D41FE Standard

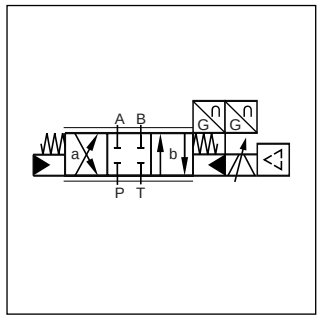

Standard D*1FE

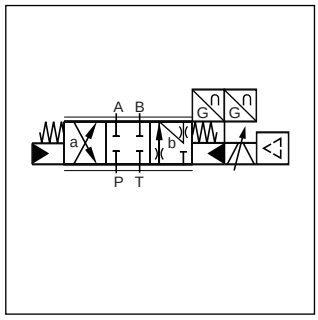

A-regeneration D*1FER

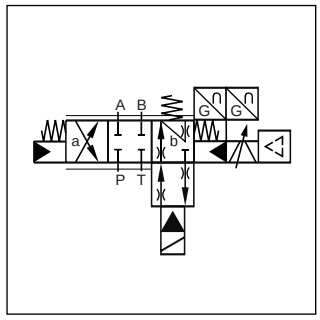

Hybrid D*1FEZ

Further literature about the opportunities of energy savings and more functional details of the integrated regeneration is available on request.

CE

D41FEE01 (Standard)

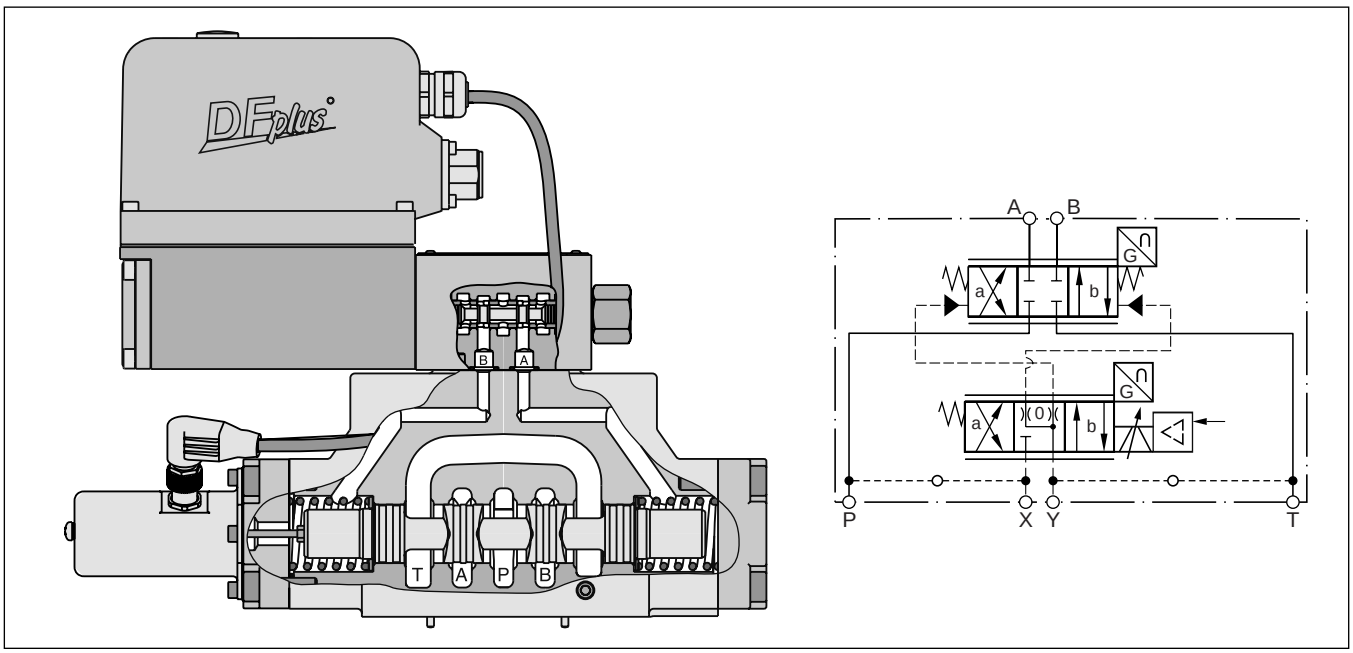

D_1FE UK.indd RH 29.08.2013

D*1FER and D*1FEZ

Regenerative valve D*1FER

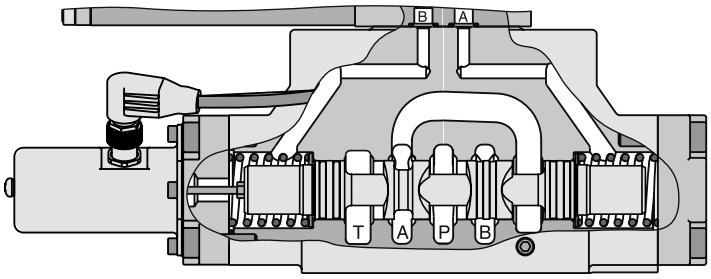

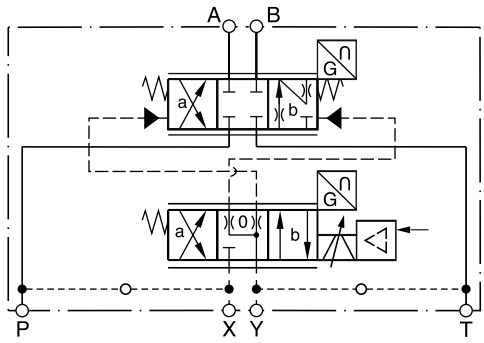

Hybrid valve D*1FEZ

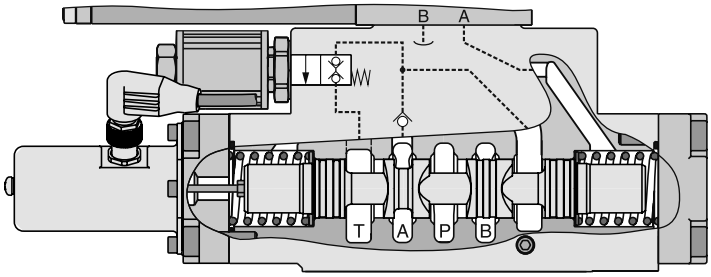

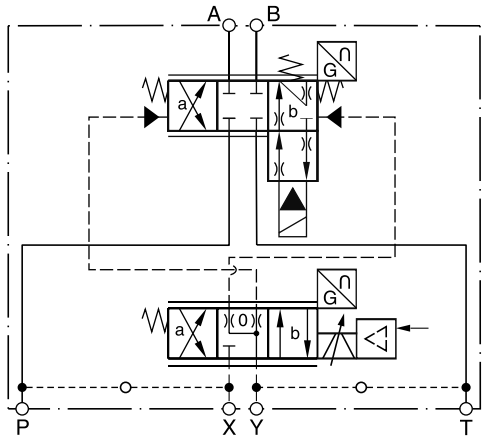

D*1FER (regenerative valve)
Cylinder extending

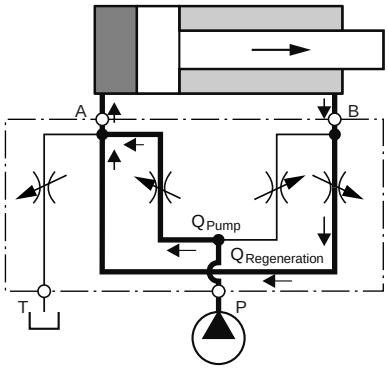

D*1FEZ (hybrid valve)
Cylinder extending
in regenerative mode (high speed)

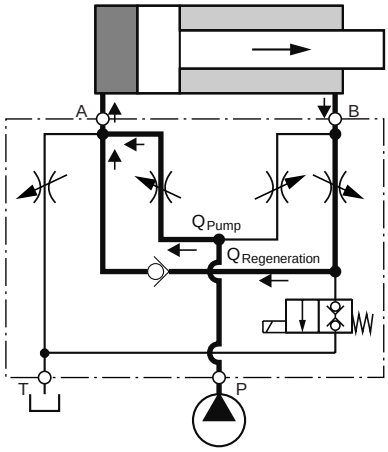

Cylinder extending
in standard mode (high force)

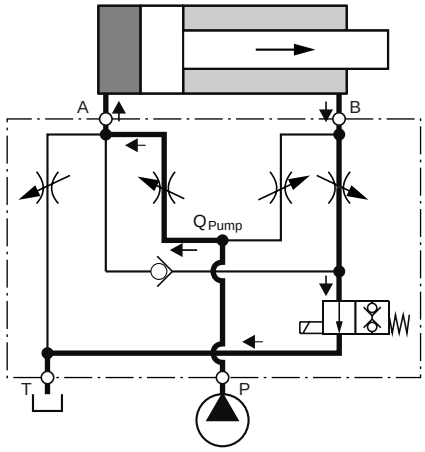

Flow rate in % of nominal flow

Size [1]	Spool	Port					
		A-T	P-A	P-B	B-A (R-Valve)	B-A (Hybrid)	B-T (Hybrid)
D41FER/Z	31/32	100 %	50 %	100 %	50 %	40 %	20 %
D91FER/Z	31/32	100 %	50 %	100 %	50 %	50 %	25 %
D111FER/Z	31/32	on request					

[1] D31FE: For size NG10 please refer solution with sandwich- and adaptor plates "A10-1664 / A10-1665L / H10-1662 / H10-1666L" in chapter 12.

D_1FE UK.indd RH 29.08.2013

3

D		1	F	E			C						
Directional control valve	Size	NG06 pilot	Proportional control	High repeatability	Function	Flow	Spool position on power down	Pilot connections	Seals	Command signal	Electronic options	Valve option	Design series (not required for ordering)

Code	Size
3	NG10 / CETOP 05
4	NG16 / CETOP 07
8	NG25 / CETOP 08
9 [1]	NG25 / CETOP 08
11	NG32 / CETOP 10

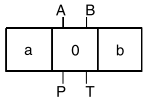

Standard		NEW: regenerative function [2] [3]		NEW: hybrid function [3] [4]	
Code	Spool type	Code	Spool type	Code	Spool type
overlap 10 %		overlap 10 %		overlap 10 %	
E01	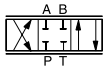	R31		Z31	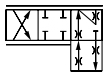
E02	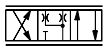	R32	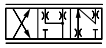	Z32	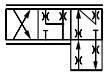
B31	$Q_B = Q_A/2$ 				
B32	$Q_B = Q_A/2$ 				

Code	Flow [l/min] at Δp = 5 bar per metering edge				
	D31	D41	D81	D91	D111
D	90	—	—	—	—
E	120	—	—	—	—
F	—	200	—	—	—
H	—	—	400	450	—
L	—	—	—	—	1000

Code	Valve option
0	Standard for spool code B, E, R
8 [6]	Monitor switch
L [5]	Hybrid valve 24 V normaly closed for spool code Z

Code	Electronic options
0	6+PE acc. EN175201-804
5	11+PE acc. EN175201-804
7	6+PE + Enable

Code	Signal	Function
B	0...±10 V	0...+10 V P -> B
E	0...±20 mA	0...+20 mA P -> B
K	0...±10 V	0...+10 V P -> A
S	4...20 mA	12...20 mA P -> A

Code	Seals
N	NBR
V	FPM
H	for HFC fluid

Code	Inlet	Drain
1	internal	external
2	external	external
4	internal	internal
5	external	internal

Short delivery time for all variations

[1] For enlarged connections Ø 32 mm.
[2] Not for D81FE.
[3] For regenerative and hybrid function at D31FE (NG10) please refer to solutions with sandwich and adaptor plates "A10-1664 / A10-1665L / H10-1662 / H10-1666L" in chapter 12.

D31FE spooltype: R31 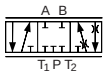

R32 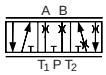

[4] Not for D31FE and D81FE.
[5] See page "Regenerative and hybrid function" (not for D31FE).
[6] Not for D111FEZ.

Please order connector separately.
See chapter 3 accessories.

D_1FE UK.indd RH 29.08.2013

General					
Design		Proportional directional control valve, pilot operated			
Actuation		VCD®-actuator			
Size		NG10 (CETOP 05)	NG16 (CETOP 07)	NG25 (CETOP 08)	NG32 (CETOP 10)
		D31	D41	D81 / D91	D111
Mounting Interface		DIN 24340 / ISO 4401 / CETOP RP121 / NFPA			
Mounting position		unrestricted			
Ambient temperature	[°C]	-20...+60			
$MTTF_D$ value	[years]	50			
Weight	[kg]	11.3	14.2	23.5	64.5
Vibration resistance	[g]	10 Sinus 5...2000 Hz acc. IEC 68-2-6 30 Random noise 20...2000 Hz acc. IEC 68-2-36 15 Shock acc. IEC 68-2-27			
Hydraulic					
Max. operating pressure	[bar]	Internal pilot drain P, A, B, X 350; T, Y 35 External pilot drain P, A, B, T, X 350; Y 35			
Fluid		Hydraulic oil acc. DIN 51524 ... 51535, other on request			
Fluid temperature	[°C]	-20...+60			
Viscosity permitted	[cSt] / [mm2/s]	20...380			
Viscosity recommended	[cSt] / [mm2/s]	30...80			
Filtration		ISO 4406 (1999) 18/16/13			
Nominal flow at Δp = 5 bar per control edge [1]	[l/min]	120	200	400/450	1000
Max. recommended Flow (Standard)	[l/min]	250	600	1000	3000
Regenerative B-A / B-T		depending on application, see flow curves			
Leakage at 100 bar	[ml/min]	200	200	600	1000
Pilot	[ml/min]	< 100			
Pilot supply pressure	[bar]	20...350			
Pilot flow, during step response at 210 bar	[l/min]	9	10	18	30
Static / Dynamic					
Step response at 100% stroke [2]	[ms]	13	19	24	60
Frequency response					
Amplitude ±5 % at 210 bar	[Hz]	180	80	65	38
Phase ±5 % at 210 bar	[Hz]	130	100	75	64
Hysteresis	[%]	< 0.1			
Sensitivity	[%]	< 0.05			
Temperature drift of Center Position	[%/K]	< 0.025			
Electrical					
Duty ratio	[%]	100			
Protection class		IP65 in accordance with EN 60529 (with correctly mounted plug-in connector)			
Supply voltage / ripple	[V]	22...30, ripple < 5 % eff., surge free			
Current consumption max.	[A]	3.5			
Pre-fusing	[A]	4.0 A medium lag			
Input signal Code K (B) Voltage	[V]	+10...0...-10, ripple < 0.01 % eff., surge free, 0...+10 V P–>A (P–>B)			
Impedance	[kOhm]	100			
Code E Voltage	[mA]	+20...0...-20, ripple < 0.01 % eff., surge free, 0...+20 mA P–>B			
Impedance	[Ohm]	250			
Code S Current	[mA]	4...12...20, ripple < 0.01 % eff., surge free, 12...20 mA P–>A			
Impedance	[Ohm]	250			
		< 3.6 mA = enable off, > 3.8 mA = enable on acc. NAMUR NE43			
Input Capacitance typ.	[nF]	1			
Differential input max. Code 0	[V]	30 for terminal D and E against PE (terminal G) 11 for terminal D and E against 0V (terminal B)			
Code 5	[V]	30 for terminal 4 and 5 against PE (terminal ⏚) 11 for terminal 4 and 5 against 0V (terminal 2)			
Code 7	[V]	30 for terminal D and E against PE (terminal G)			
Enable signal Code 5/7	[V]	5...30, Ri = 9 kOhm			
Diagnostic signal	[V]	+10...0...-10 / +Ub, rated max. 5 mA			
EMC		EN 61000-6-2, EN 61000-6-4			
Electrical connection Code 0/7		6 + PE acc. EN 175201-804			
Code 5		11 + PE acc. EN 175201-804			
Wiring min. Code 0/7		7 x 1.0 AWG16 overall braid shield			
Code 5		8 x 1.0 AWG16 overall braid shield			
Wiring lenght max.	[m]	50			

[1] Flow rate for different Δp per control edge: $Q_x = Q_{Nom.} \cdot \sqrt{\frac{\Delta p_x}{\Delta p_{Nom.}}}$

[2] Measured with load (210 bar pressure drop/two control edges).

D_1FE UK.indd RH 29.08.2013

3

Monitor switch M12x1 pin assignment

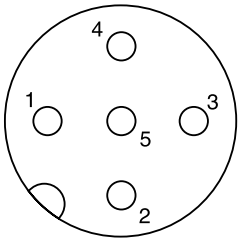

1 + Supply 18...42V
2 output B (normally closed)
3 0V
4 output A (normally closed)
5 Earth ground

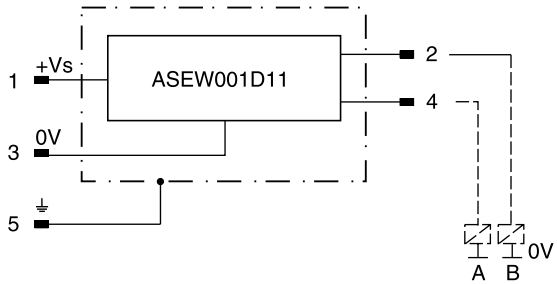

Signal	Output A (pin 4)	Output B (pin 2)
neutral	closed	closed
	open	closed
	closed	open

The neutral position is monitored. The signal changes after less than 10 % of the spool stroke.

Electrical monitor switch

Protection class		IP65 in accordance with EN 60529 (with correctly mounted plug-in connector)
Ambient temperature	[°C]	0-70
Supply voltage/ripple	[V]	18...42, ripple < 10 % eff.
Current consumption without load	[mA]	< 30
Max. output current per channel, ohmic	[mA]	400
Min. output load per channel, ohmic	[kOhm]	100
Max. output drop at 0.2 A	[V]	< 1.1
Max. output drop at 0.4 A	[V]	< 1.6
EMC		EN61000-6-2, EN61000-6-4
Max. tol. ambient field strength	[A/m]	1200
Min. distance to next AC solenoid	[m]	0.1
Interface		4+PE acc. IEC 61076-2-101 (M12)
Wiring min.	[mm²]	5x0.5 (AWG 20) overall braid shield
Wiring lenght max.	[m]	50

Electrical characteristics hybrid option

Duty ratio		100 %		
Protection class		IP 65 in accordance with EN 60529 (with correctly mounted plug-in connector)		
		D41	D91	D111
Supply voltage	[V]	24	24	24
Tolerance supply voltage	[%]	±10	±10	±10
Current consumption	[A]	1.21	0.96	1.29
Power consumption	[W]	29	23	31
Solenoid connection		Connector as per EN 175301-803		
Wiring min.	[mm²]	3 x 1.5 recommended		
Wiring length max.	[m]	50 recommended		

With electrical connections the protective conductor (PE ⏚) must be connected according to the relevant regulations.

3

Wiring

Code 0, 6 + PE acc. EN 175201-804

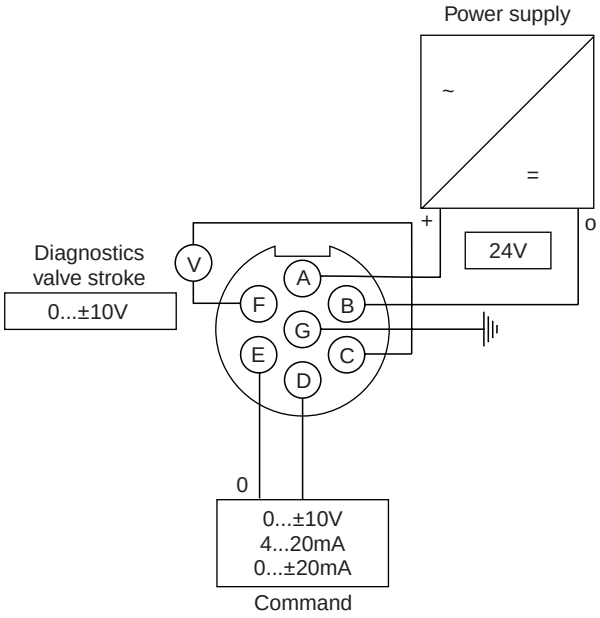

Code 5, 11 + PE acc. EN 175201-804

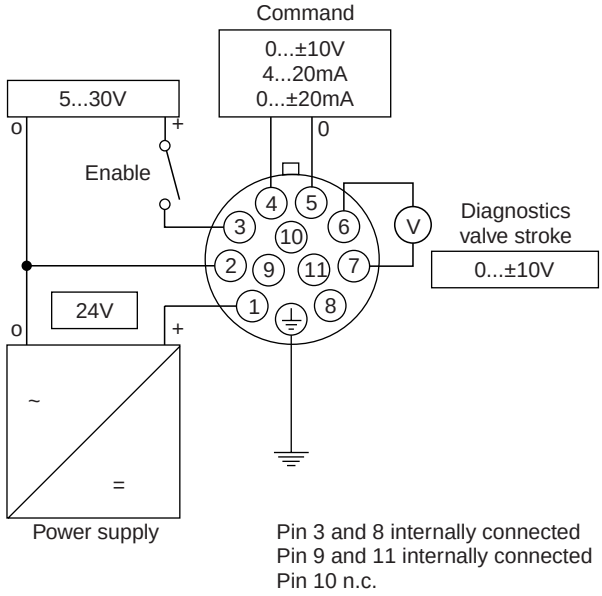

Code 7, 6 + PE acc. EN 175201-804 + enable

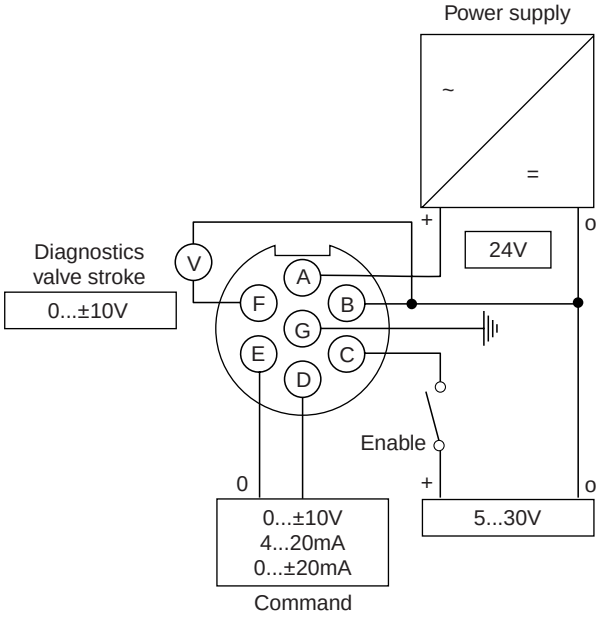

D_1FE UK.indd RH 29.08.2013

3

Frequency response

±5 % / ±25 % / ±90 % command signal
Dynamics at 210 bar pilot supply pressure

D31FE

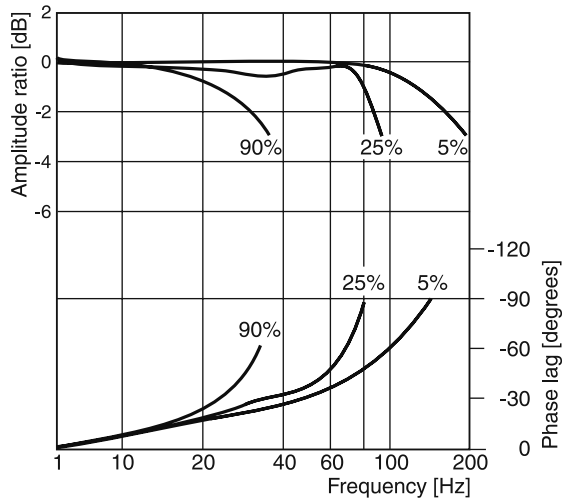

D41FE

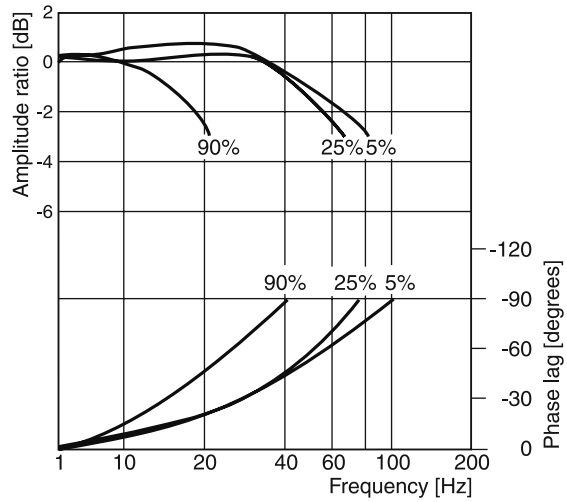

D81/91FE

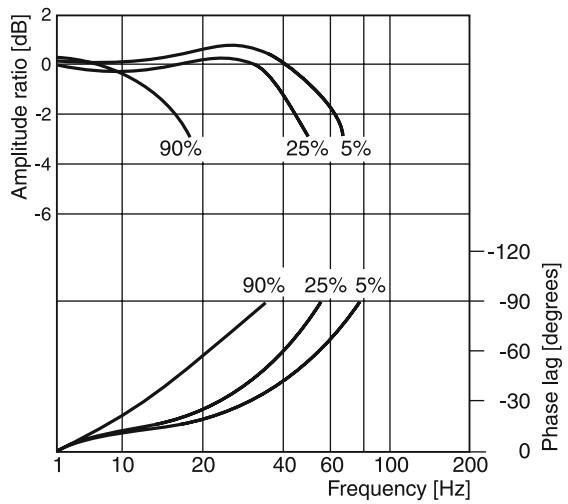

D111FE

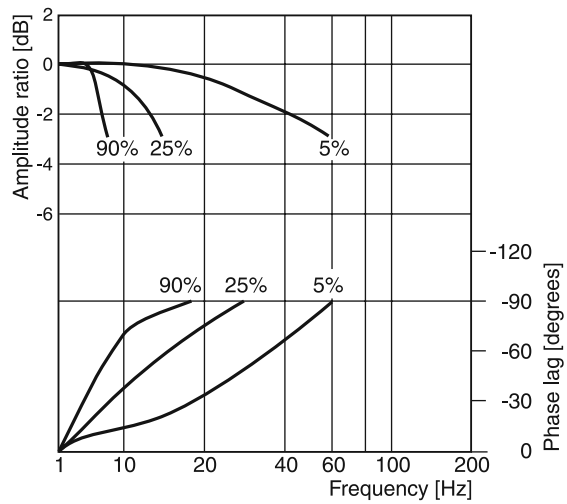

Flow curves D*1FEB/E

at Δp = 5 bar per metering edge

D31FE

spool type E01/02, B31/32

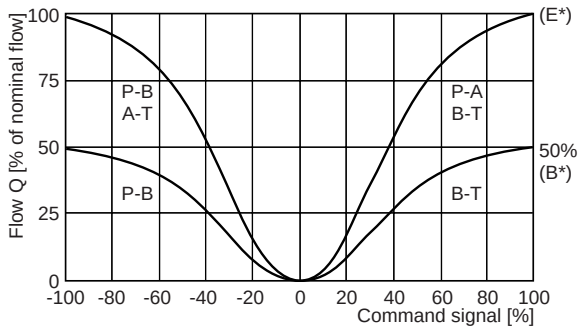

D41FE

spool type E01/02, B31/32

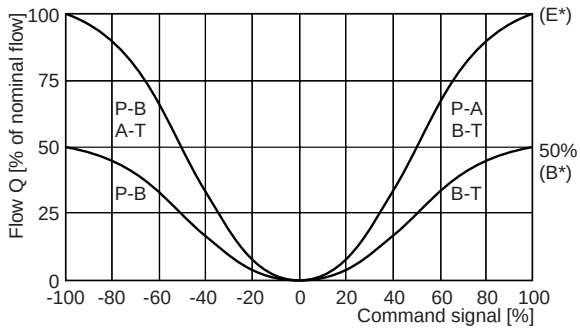

All characteristic curves measured with HLP46 at 50 °C.

D_1FE UK.indd RH 29.08.2013

Flow curves

D81/91FE

Spool type E01/02, B31/32

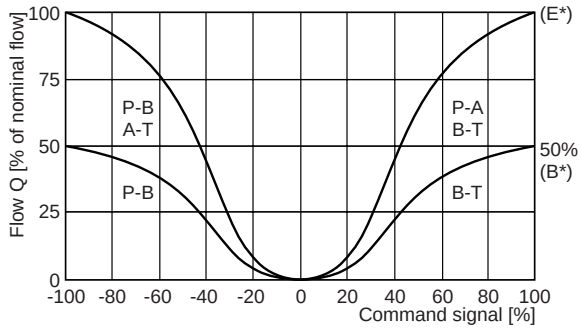

D111FE

Spool type E01/02, B31/32

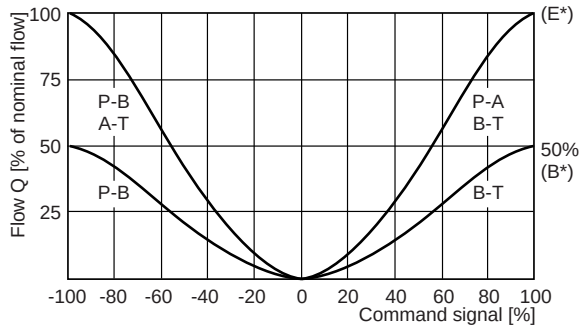

D*1FER/Z

at Δp = 5 bar per metering edge

D31FE

spool type R31/32

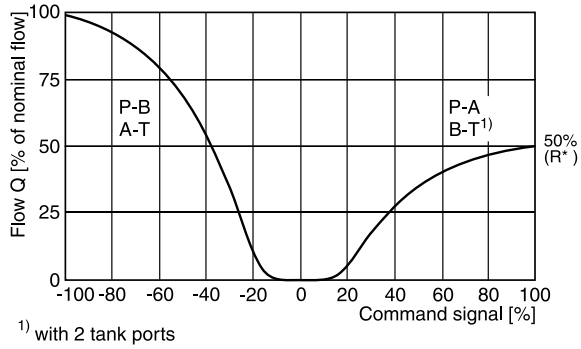

1) with 2 tank ports

D41FE

spool type R/Z31/32

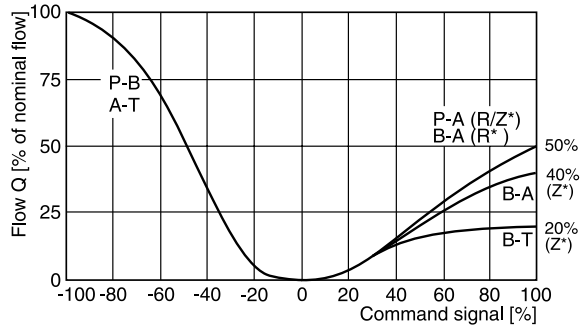

D91FE

Spool type R/Z31/32

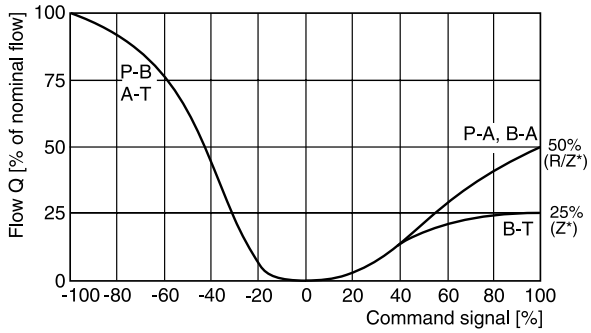

D111FE

Spool type R/Z* on request

All characteristic curves measured with HLP46 at 50 °C.

D_1FE UK.indd RH 29.08.2013

3

Pilot oil inlet (supply) and outlet (drain)

○ **open,** ● **closed**

Pilot oil Inlet	Pilot oil Drain	B	C
internal	external	○	●
external	external	●	●
internal	internal	○	○
external	internal	●	○

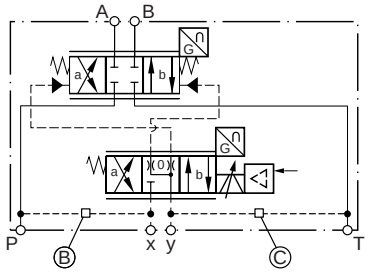

D31FEB/E

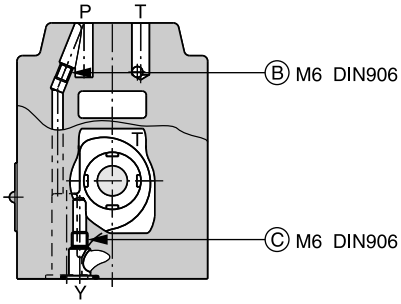

(drawn offset)

D31FER

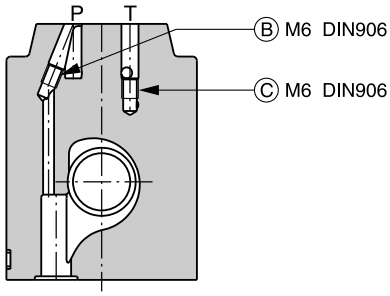

D41FEB/E

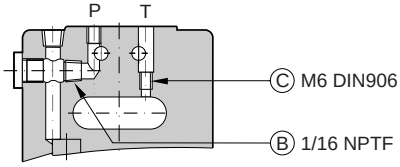

D41FER

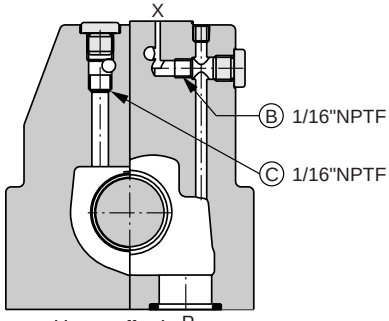

(drawn offset)

D41FEZ

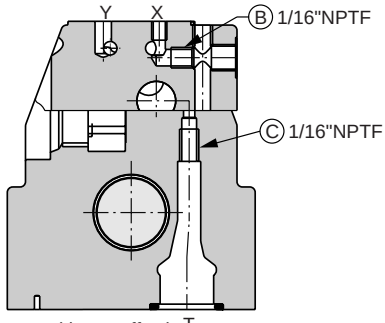

(drawn offset)

D81/91FEB/E

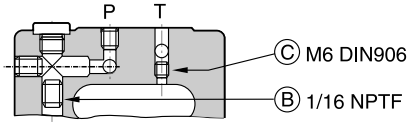

D91FER

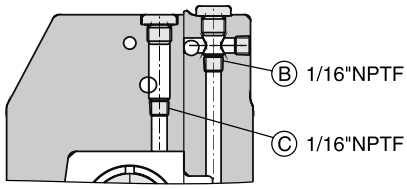

(drawn offset)

D91FEZ

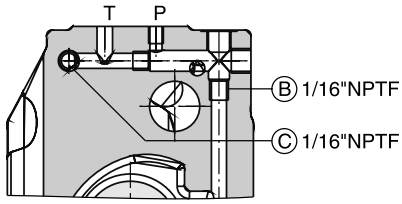

D111FEB/E

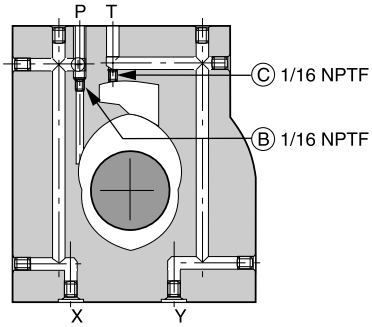

D111FER

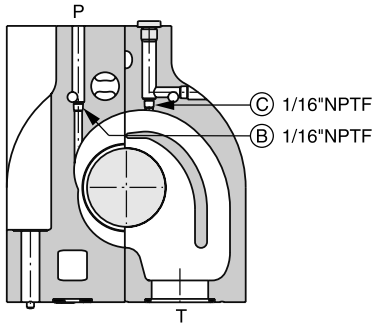

(drawn offset)

D111FEZ

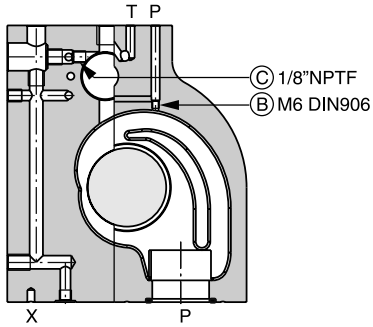

(drawn offset)

D31FE

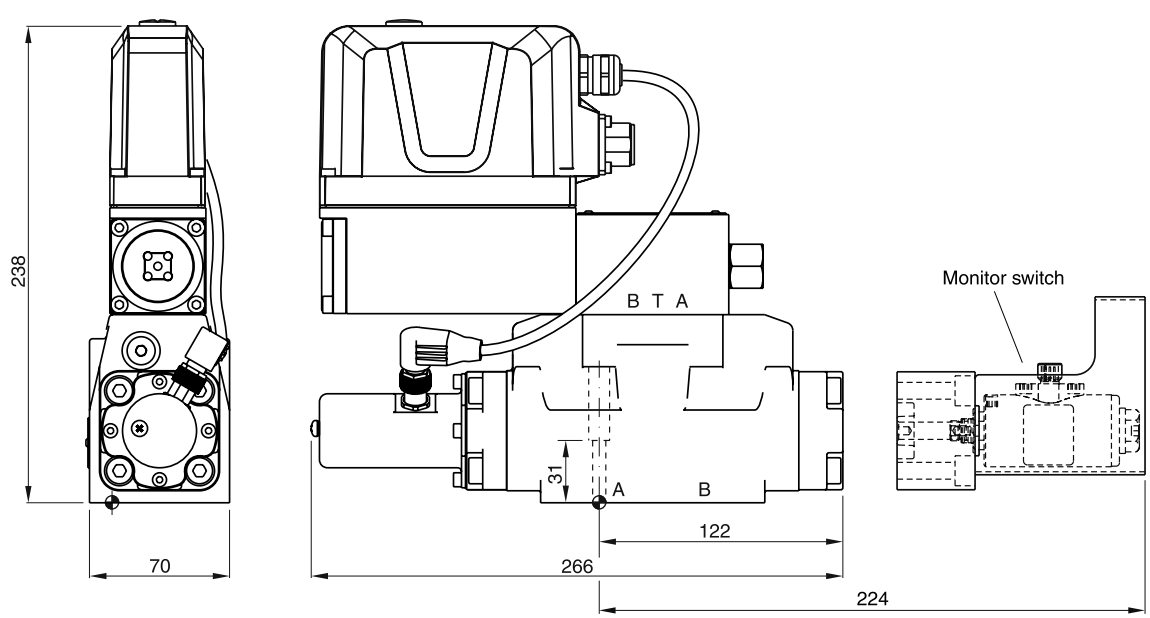

Regenerative and hybrid function with additional plate "A10-1664 / A10-1665L / H10-1662 / H10-1666L", see chapter 12.

Surface finish	Kit			Kit
R_{max}6.3 ▱ 0.01/100	BK385	4x M6x40 ISO 4762-12.9	13.2 Nm ±15 %	NBR: SK-D31FP FPM: SK-D31FP-V

D41FE

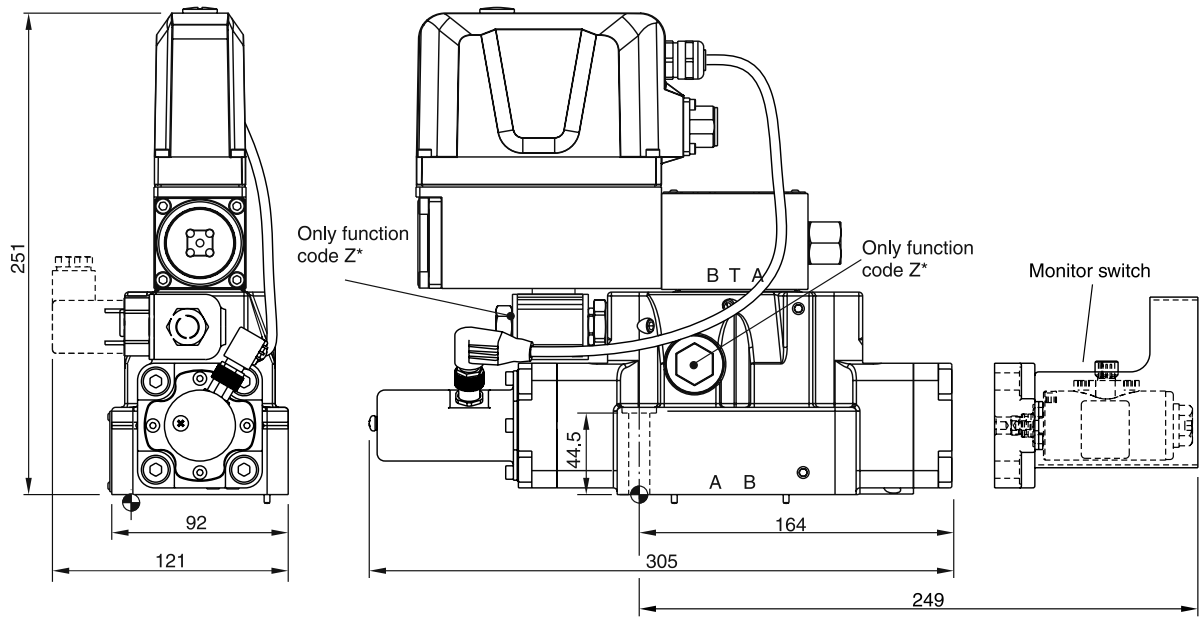

Surface finish	Kit			Kit
R_{max}6.3 ▱ 0.01/100	BK320	2x M6x55 4x M6x60 ISO 4762-12.9	13.2 Nm ±15 % 63 Nm ±15 %	NBR: SK-D41FP FPM: SK-D41FP-V

3

D81/91FE

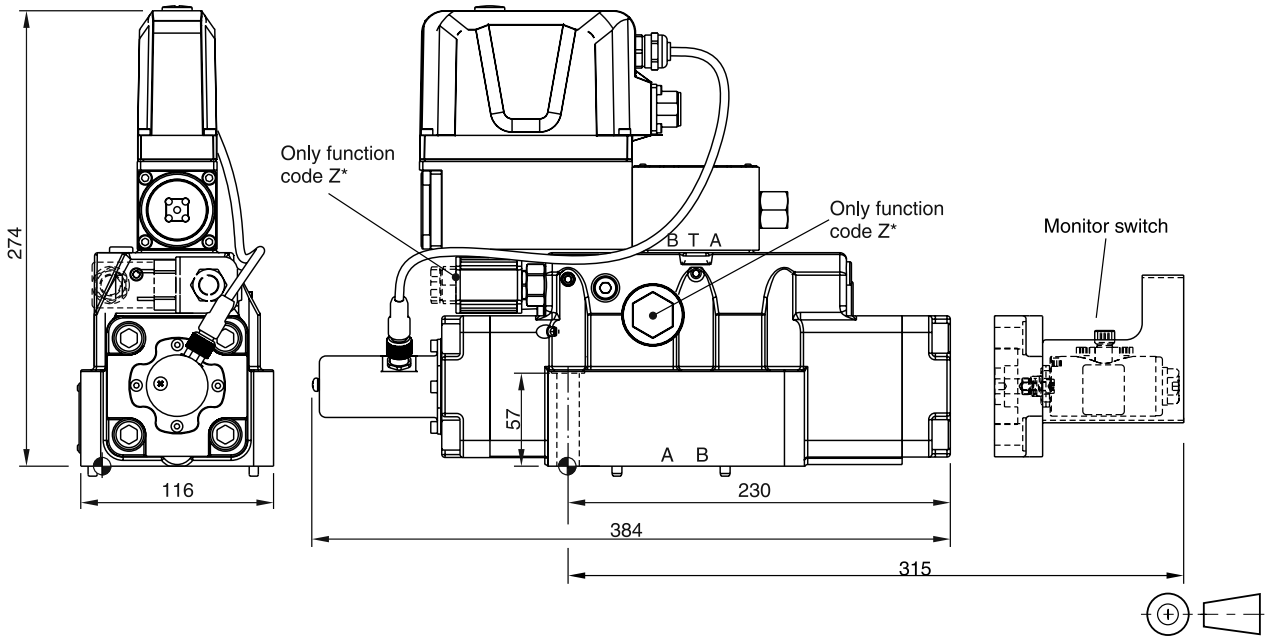

Surface finish	Kit			Kit
R_{max}6.3 / 0.01/100	BK360	6x M12x75 ISO 4762-12.9	108 Nm ±15 %	NBR: SK-D81/D91FP FPM: SK-D81/D91FP-V

D111FE

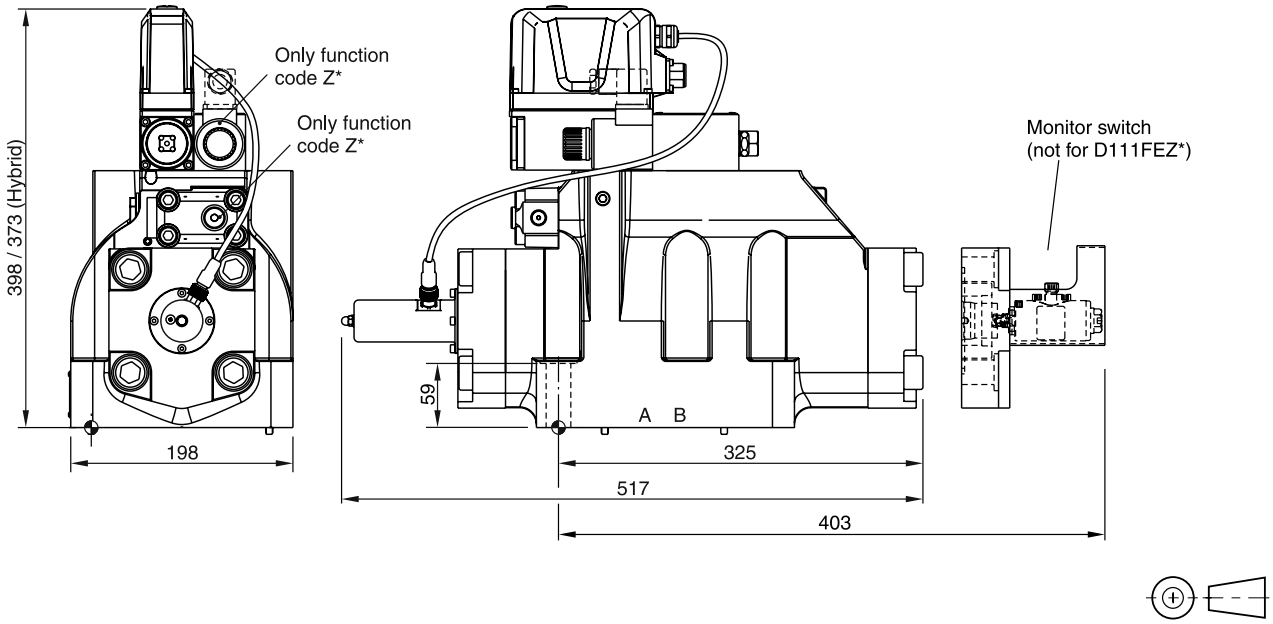

Surface finish	Kit			Kit
R_{max}6.3 / 0.01/100	BK386	6x M20x90 ISO 4762-12.9	517 Nm ±15 %	NBR: SK-D111FP FPM: SK-D111FP-V

The direct operated control valve D1FP of the nominal size NG06 (CETOP 03) shows extremly high dynamics combined with maximum flow. It is the preferred choice for highest accuracy in positioning of hydraulic axis and controlling of pressure and velocity.

Driven by the patented VCD® actuator the D1FP reaches the frequency response of real servovalves. Compared with solenoid driven valves the D1FP can also be used in applications with pressure drops up to 350 bar across the valve. Because of the high flow capability the D1FP can be a substitute for NG10 valves in some cases.

At power-down the spool moves in a defined position. All common input signals are available.

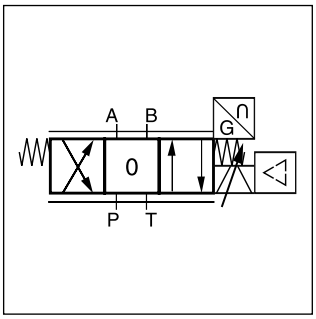

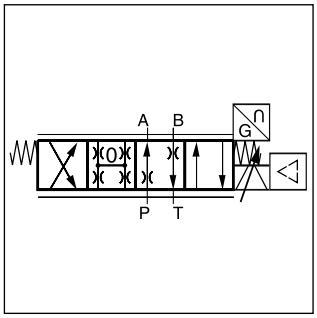

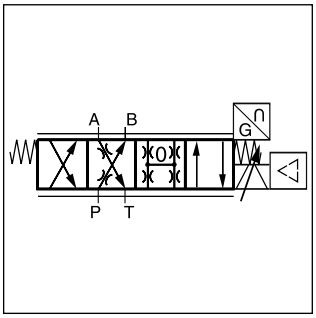

Technical features

- Real servovalve dynamics
  (-3 dB / 350 Hz at ±5 % input signal)
- No flow limit up to 350 bar pressure drop through the valve
- Max. tank pressure 350 bar
  (with external drain port y)
- High flow
- Defined spool positioning at power-down - optional
  P-A/B-T or P-B/A-T or center position
  (for overlapped spools)
- Onboard electronics

CE

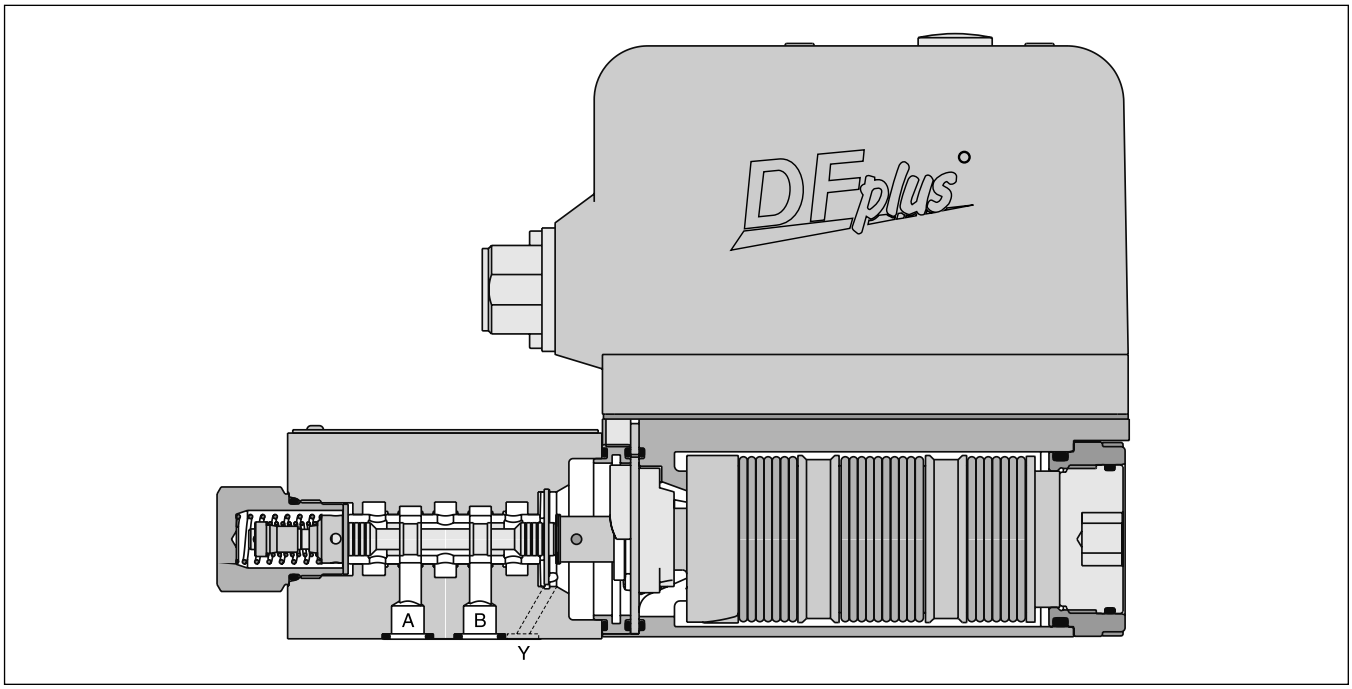

3

D	1	F	P			9				0	
Directional control valve	**Size DIN NG06 CETOP 03 NFPA D03**	**Proportional control**	**VCD**	**Spool type**	**Spool position on power down [1]**	**Y-port (plugged) [5]**	**Seals**	**Command signal**	**Acces-sories**	**Spool/ sleeve design**	**Design series** (not required for ordering)

Code	Spool type	Flow [l/min] at Δp 35 bar per metering edge
Zerolap		
E50M		**40**
E50H		**25**
E50G		**16**
E50F		**12**
E50C		**6**
E50B		**3**
B60M	$Q_B = Q_A/2$ 	**40 / 20**
B60H		**25 / 12.5**
B60G		**16 / 8**
B60F		**12 / 6**
B60C		**6 / 3**
Underlap approx. -0.5 %		
E55M		**40**
E55H		**25**
E55G		**16**
E55F		**12**
E55C		**6**
E55B		**3**
Overlap 25 %		
E01M	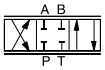	**40**
E01H		**25**
E01G		**16**
E01F		**12**
E01C		**6**
E01B		**3**
B31M	$Q_B = Q_A/2$ 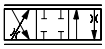	**40 / 20**
B31H		**25 / 12.5**
B31G		**16 / 8**
B31F		**12 / 6**
B31C		**6 / 3**
E02M	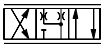	**40**
E02H		**25**
E02G		**16**
E02F		**12**
E02C		**6**
E02B		**3**
B32M	$Q_B = Q_A/2$ 	**40 / 20**
B32H		**25 / 12.5**
B32G		**16 / 8**
B32F		**12 / 6**
B32C		**6 / 3**

Code	Connection type
0	**6 + PE acc. EN175201-804**
5	**11 + PE acc. EN175201-804**
7	**6 + PE + Enable**

Code	Signal	Function
B	**+/- 10 V**	**0...+10 V -> P-A**
E	**+/- 20 mA**	**0...+20 mA -> P-A**
S	**4...20 mA**	**12...20 mA -> P-A**

Code	Seals
N	**NBR**
V	**FPM**
H	**for HFC fluid**

Code	Spool position at power down
A [2]	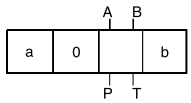
B [2]	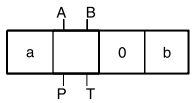
C [3]	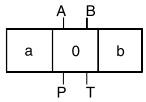
H [4]	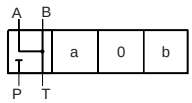
J [4]	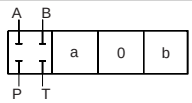

Note:

Adapter plate for ISO 4401 to ISO 10372 size 04
Ordering code HAP04WV06-1661
Please order connector separately, see chapter 3 accessories.

Short delivery time for all variations

[1] On power down the spool moves in a defined position. This cannot be guaranteed in case of single flow path on the control edge A – T resp. B – T with pressure drops above 120 bar or contamination in the hydraulic fluid.
[2] Approx. 10 % opening, only zero lapped spools and underlap spools.
[3] Only for overlapped spools.
[4] Not for flow code M (40 l/min).
[5] Needs to be removed at tank pressure >35 bar.

General		
Design		Direct operated proportional DC valve
Actuation		VCD® actuator
Size		NG06 / CETOP 03 / NFPA D03
Mounting interface		DIN 24340 / ISO 4401 / CETOP RP121 / NFPA
Mounting position		unrestricted
Ambient temperature	[°C]	-20...+50
$MTTF_D$ value	[years]	75
Weight	[kg]	5.0
Vibration resistance	[g]	10 Sinus 5...2000 Hz acc. IEC 68-2-6 30 Random noise 20...2000 Hz acc. IEC 68-2-36 15 Shock acc. IEC 68-2-27
Hydraulic		
Max. operating pressure	[bar]	Ports P, A, B 350, port T 35 for internal drain, 350 for external drain, port Y 35 [1]
Fluid		Hydraulic oil as per DIN 51524 ... 51535, other on request
Fluid temperature	[°C]	-20...+60
Viscosity permitted	[cSt] / [mm²/s]	20...380
recommended	[cSt] / [mm²/s]	30...80
Filtration		ISO 4406 (1999) 18/16/13
Nominal flow at Δp=35 bar per control edge [2]	[l/min]	3 / 6 / 12 / 16 / 25 / 40
Flow maximum	[l/min]	90 (at Δp=350 bar over two control edges)
Leakage at 100 bar	[ml/min]	<400 (zerolap spool); <50 (overlap spool)
Static / Dynamic		
Step response at 100 % step [3]	[ms]	<3.5
Frequency response (±5 % signal) [3]	[Hz]	350 (amplitude ratio -3 dB), 350 (phase lag -90°)
Hysteresis	[%]	<0.05
Sensitivity	[%]	<0.03
Temperature drift	[%/K]	<0.025
Electrical characteristics		
Duty ratio	[%]	100
Protection class		IP65 in accordance with EN 60529 (with correctly mounted plug-in connector)
Supply voltage/ripple	[V]	DC 22 ... 30, ripple <5 % eff., surge free
Current consumption max.	[A]	3.5
Pre-fusing	[A]	4.0 medium lag
Input signal		
Voltage	[V]	10...0...-10, ripple <0.01 % eff., surge free, 0...+10 V P->A
Impedance	[kOhm]	100
Current	[mA]	20...0...-20, ripple <0.01 % eff., surge free, 0...+20 mA P->A
Impedance	[Ohm]	250
Current	[mA]	4...12...20, ripple <0.01 % eff., surge free, 12...20 mA P->A <3.6 mA = disable, >3.8 mA = according to NAMUR NE43
Impedance	[Ohm]	250
Differential input max.		
Code 0	[V]	30 for terminal D and E against PE (terminal G)
Code 5	[V]	30 for terminal 4 and 5 against PE (terminal ⏚)
Code 7	[V]	30 for terminal D and E against PE (terminal G)
Enable signal (only code 5/7)	[V]	5...30, Ri = 9 kOhm
Diagnostic signal	[V]	+10...0...-10 / +Ub, rated max. 5 mA
EMC		EN 61000-6-2, EN 61000-6-4
Electrical connection	Code 0/7	6 + PE acc. EN 175201-804
	Code 5	11 + PE acc. EN 175201-804
Wiring min. Code 0/7	[mm²]	7x1.0 (AWG 18) overall braid shield
Code 5	[mm²]	8x1.0 (AWG 18) overall braid shield
Wiring lenght max.	[m]	50

[1] For applications with p_T>35 bar (max. 350 bar) the Y-port has to be connected and the plug in the Y-port has to be removed.

[2] Flow rate for different Δp per control edge: $Q_x = Q_{Nom.} \cdot \sqrt{\frac{\Delta p_x}{\Delta p_{Nom.}}}$

[3] Measured with load (100 bar pressure drop/two control edges).

3

Flow curves
at Δp = 35 bar per metering edge

Spool type **E01/E50**

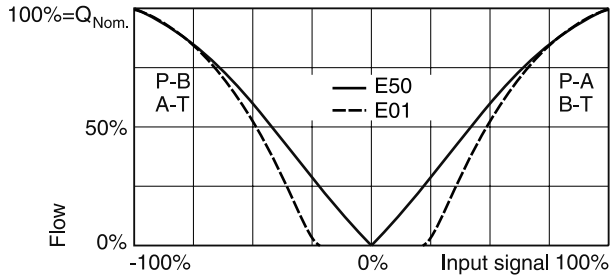

Spool type **B60**

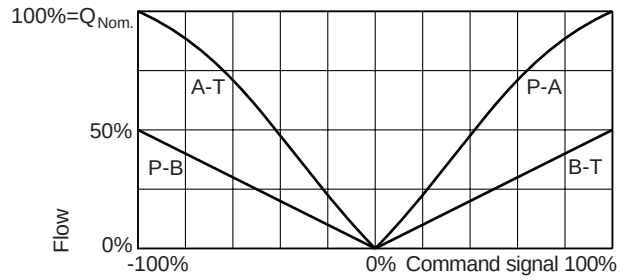

Pressure gain

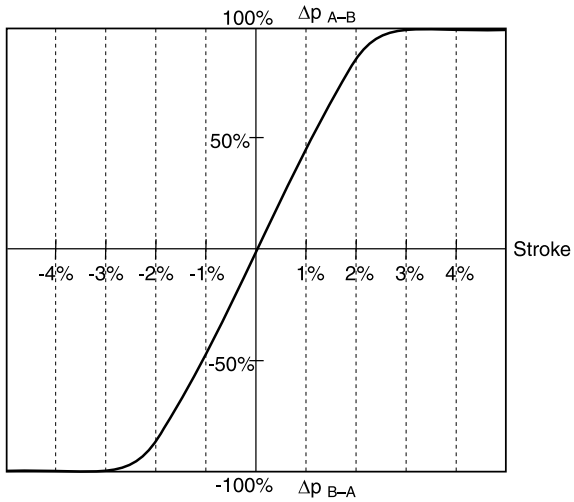

Functional limits
at 25 %, 50 %, 75 % and 100 % command signal

Spool type **E50M**

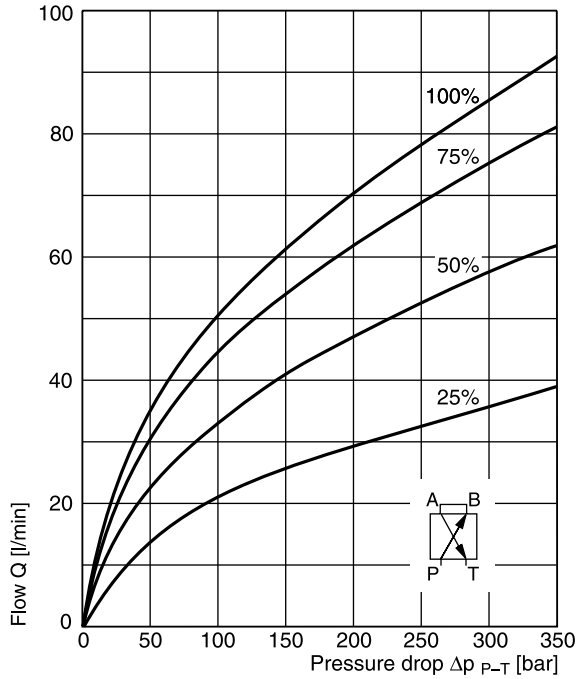

Frequency response
±5 % command signal
±90 % command signal

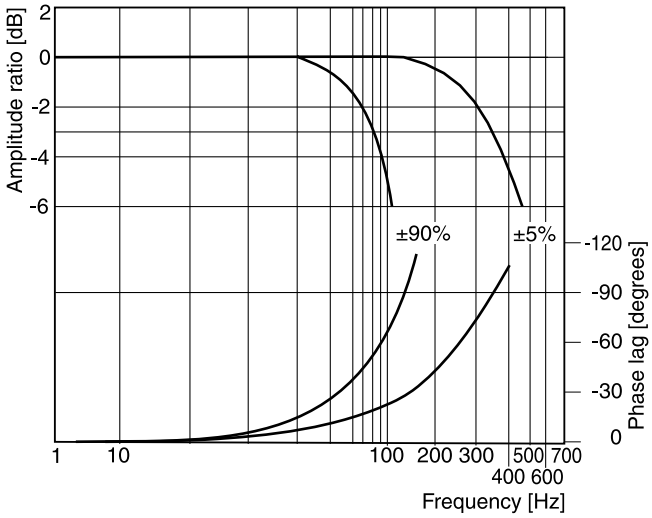

All characteristic curves measured with HLP46 at 50 °C.

D1FP UK.indd RH 29.08.2013

Code 0

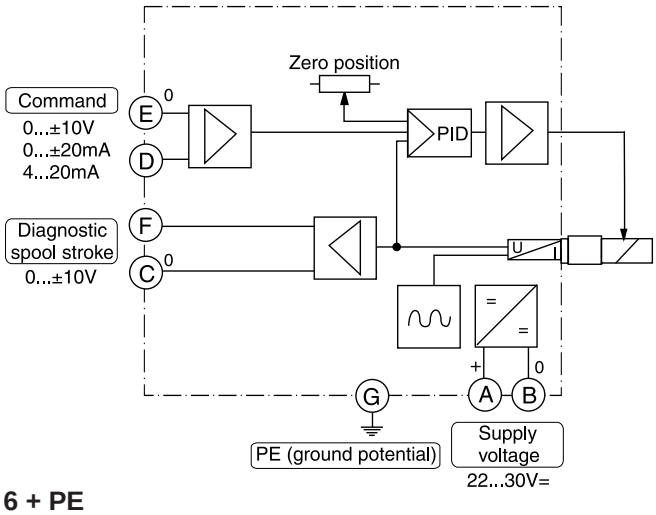

6 + PE

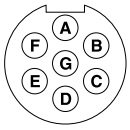

Code 5

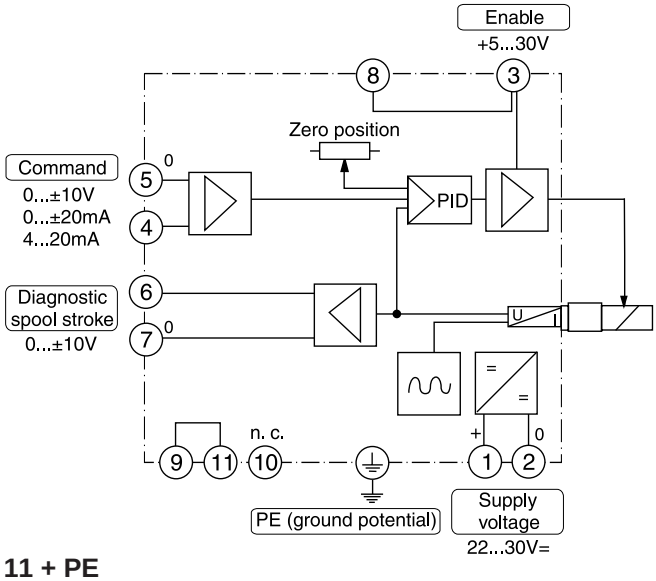

11 + PE

Code 7

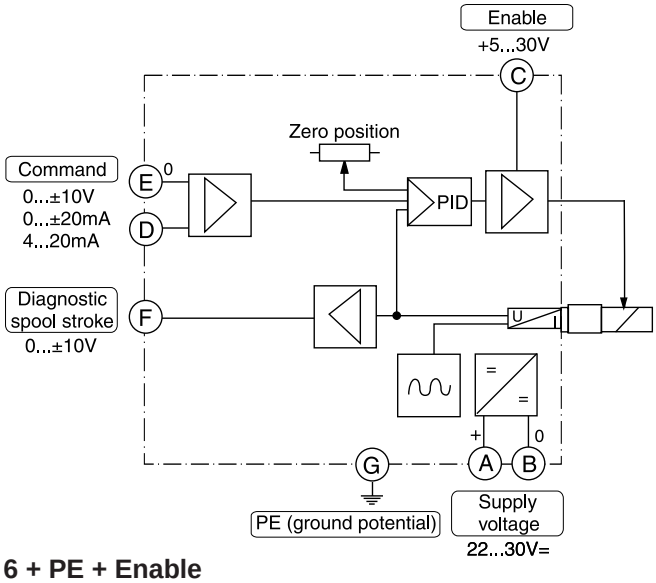

6 + PE + Enable

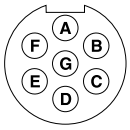

3

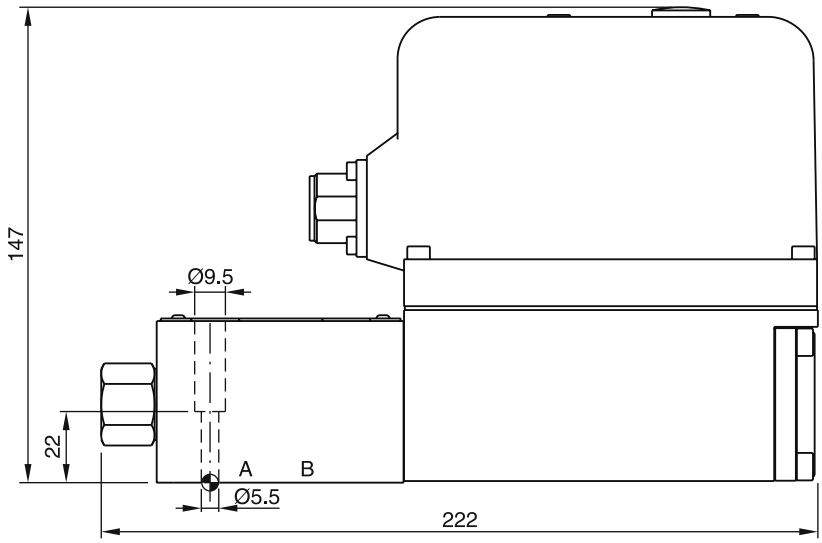

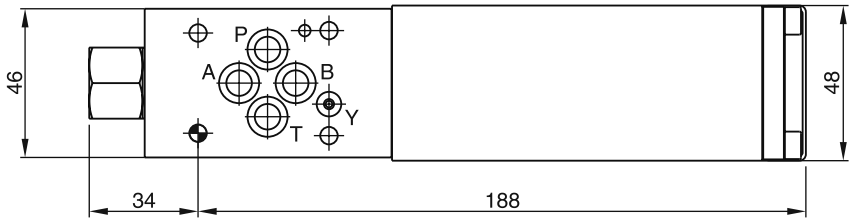

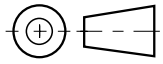

Surface finish	Kit			Kit
R_{max}6.3 ▱ 0.01/100	BK375	4x M5x30 ISO 4762-12.9	7.6 Nm ±15 %	NBR: SK-D1FP FPM: SK-D1FP-V HFC: SK-D1FP-H

The direct operated control valve D3FP of the nominal size NG10 (CETOP 05) shows extremly high dynamics combined with high flow. It is the preferred choice for highest accuracy in positioning of hydraulic axis and controlling of pressure and velocity.

Driven by the patented VCD® actuator the D3FP reaches the frequency response of real servovalves.

At power-down the spool moves in a defined position. All common input signals are available.

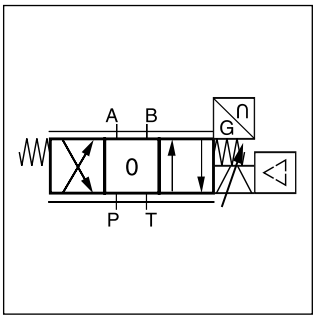

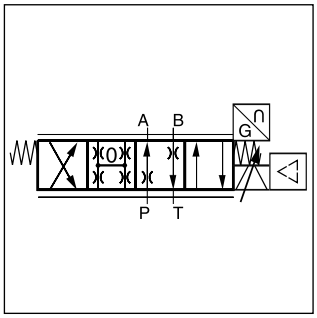

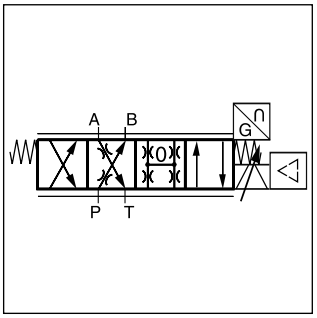

Technical features

- Real servovalve dynamics
  (-3 dB / 350 Hz at ±5 % input signal)
- Max. tank pressure 250 bar
  (with external drain port Y)
- Defined spool positioning at power-down - optional
  P-A/B-T or P-B/A-T or center position
  (for overlapped spools)
- Onboard electronics
- Spool / sleeve design

CE

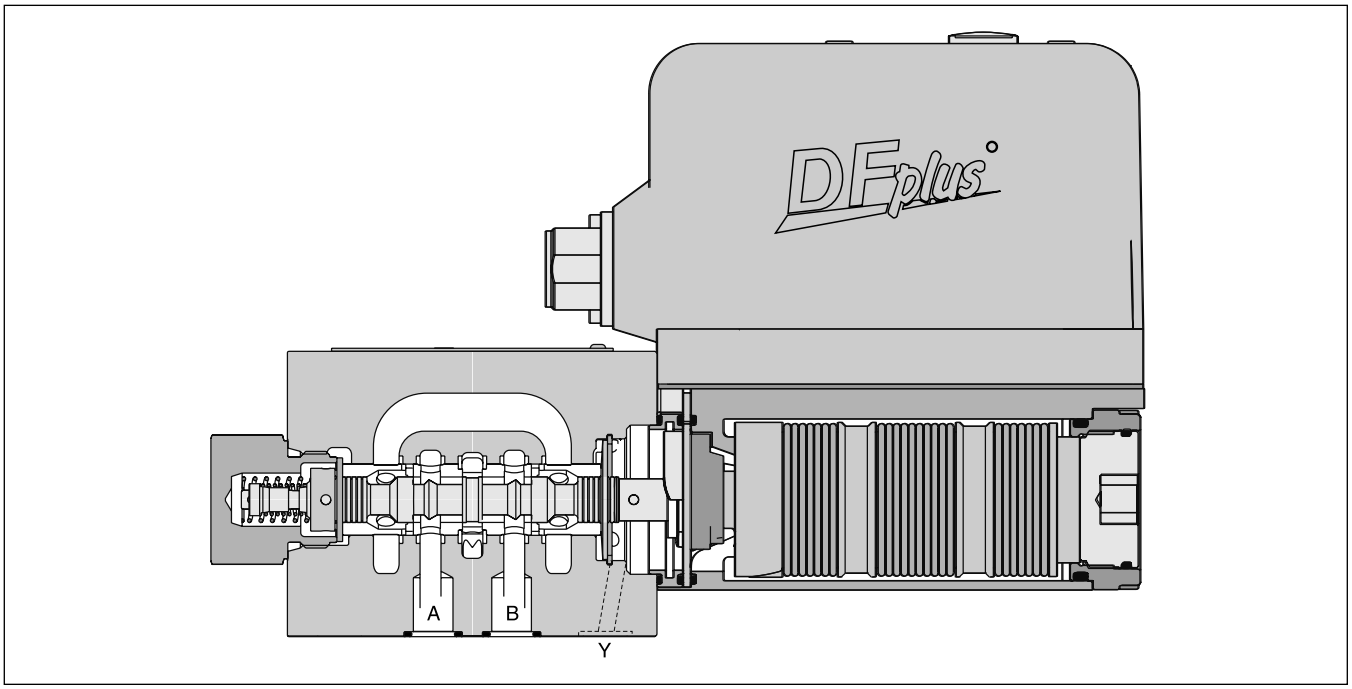

3

D	3	F	P			9				0	
Direct. control valve	**Size DIN NG10 CETOP 05 NFPA D05**	**Proportional control**	**VCD**	**Spool type**	**Spool position on power down [1]**	**Y-port (plugged) [4]**	**Seals**	**Command signal**	**Acces-sories**	**Spool/ sleeve design**	**Design series** (not required for ordering)

Code	Spool type	Flow [l/min] at Δp 35 bar per metering edge
Zerolap		
E50Y		**100**
E50P		**50**
B60Y		**100**
B60P		**50**
Underlap approx. -0.5 %		
E55Y		**100**
E55P		**50**
Overlap 18 %		
E01Y **E01P**	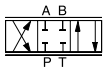	**100** **50**
E02Y **E02P**		**100** **50**
B31Y **B31P**	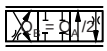	**100 / 50** **50 / 25**
B32Y **B32P**		**100 / 50** **50 / 25**

Code	Connection type
0	**6 + PE acc. EN175201-804**
5	**11 + PE acc. EN175201-804**
7	**6 + PE + Enable**

Code	Signal	Function
B	**+/- 10 V**	**0...+10 V -> P-A**
E	**+/- 20 mA**	**0...+20 mA -> P-A**
S	**4...20 mA**	**12...20 mA -> P-A**

Code	Seals
N	**NBR**
V	**FPM**
H	**for HFC fluid**

Code	Spool pos. at power down
A [2]	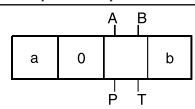
B [2]	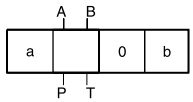
C [3]	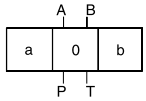

Short delivery time for all variations

For regenerative and hybrid function at D31FB (NG10) please refer solutions with sandwich- and adaptor plates "A10-1664 / A10-1665L / H10-1662 / H10-1666L" in chapter 12.

Please order connector separately, see chapter 3 accessories.

[1] On power down the spool moves in a defined position. This cannot be guaranteed in case of single flow path on the control edge A – T resp. B – T with pressure drops above 120 bar or contamination in the hydraulic fluid.

[2] Approx. 10 % opening, only zerolapped spools and underlapped spools.

[3] Only for overlapped spools.

[4] Needs to be removed at tank pressure >35 bar.

D3FP UK.indd RH 29.08.2013

General		
Design		Direct operated proportional DC valve
Actuation		VCD® actuator
Size		NG10 / CETOP 05 / NFPA D05
Mounting interface		DIN 24340 / ISO 4401 / CETOP RP121 / NFPA
Mounting position		unrestricted
Ambient temperature	[°C]	-20...+50
$MTTF_D$ value	[years]	75
Weight	[kg]	6.5
Vibration resistance	[g]	10 Sinus 5...2000 Hz acc. IEC 68-2-6 30 Random noise 20...2000 Hz acc. IEC 68-2-36 15 Shock acc. IEC 68-2-27
Hydraulic		
Max. operating pressure	[bar]	Ports P, A, B 350, port T 35 for internal drain, 315 for external drain, port Y 35 [1)]
Fluid		Hydraulic oil as per DIN 51524 ... 51535, other on request
Fluid temperature	[°C]	-20...+60
Viscosity permitted	[cSt] / [mm^2/s]	20...380
Viscosity recommended	[cSt] / [mm^2/s]	30...80
Filtration		ISO 4406 (1999) 18/16/13
Flow nominal at Δp=35bar per control edge [2)]	[l/min]	50 / 100
Flow maximum	[l/min]	150
Leakage at 100 bar	[ml/min]	<400 (zerolap spool); <100 (overlap spool)
Static / Dynamic		
Step response at 100 % step [3)]	[ms]	<6
Frequency response (±5 % signal) [3)]	[Hz]	200 (amplitude ratio -3 dB), 200 (phase lag -90°)
Hysteresis	[%]	<0.05
Sensitivity	[%]	<0.03
Temperature drift	[%/K]	<0.025
Electrical characteristics		
Duty ratio	[%]	100
Protection class		IP65 in accordance with EN 60529 (with correctly mounted plug-in connector)
Supply voltage/ripple	[V]	22 ... 30, ripple <5 % eff., surge free
Current consumption max.	[A]	3.5
Pre-fusing	[A]	4.0 medium lag
Input signal		
Voltage	[V]	10...0...-10, ripple <0.01 % eff., surge free, 0...+10 V P->A
Impedance	[kOhm]	100
Current	[mA]	20...0...-20, ripple <0.01 % eff., surge free, 0...+20 mA P->A
Impedance	[Ohm]	250
Current	[mA]	4...12...20, ripple <0.01 % eff., surge free, 12...20 mA P->A <3.6 mA = disable, >3.8 mA = according to NAMUR NE43
Impedance	[Ohm]	250
Differential input max.		
Code 0	[V]	30 for terminal D and E against PE (terminal G)
Code 5	[V]	30 for terminal 4 and 5 against PE (terminal ⏚)
Code 7	[V]	30 for terminal D and E against PE (terminal G)
Enable signal (only code 5/7)	[V]	5...30, Ri = 9 kOhm
Diagnostic signal	[V]	+10...0...-10 / +Ub, rated max. 5 mA
EMC		EN 61000-6-2, EN 61000-6-4
Electrical connection	Code 0/7 Code 5	6 + PE acc. EN 175201-804 11 + PE acc. EN 175201-804
Wiring min. Code 0/7	[mm^2]	7 x 1.0 (AWG 18) overall braid shield
Wiring min. Code 5	[mm^2]	8 x 1.0 (AWG 18) overall braid shield
Wiring lenght max.	[m]	50

1) For applications with p_T>35 bar (max. 250 bar) the Y-port has to be connected and the plug in the Y-port has to be removed.

2) Flow rate for different Δp per control edge: $Q_x = Q_{Nom.} \cdot \sqrt{\frac{\Delta p_x}{\Delta p_{Nom.}}}$

3) Measured with load (100 bar pressure drop/two control edges).

3

Functional limits*
at 25 %, 50 %, 75 % and 100 % command signal

Spool type **E01/E02**

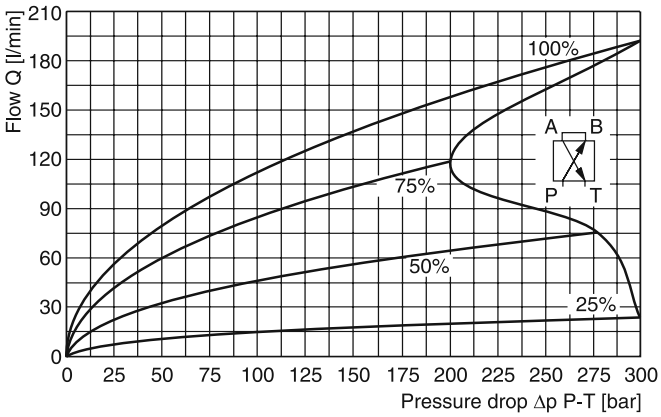

Functional limits*
at 25 %, 50 %, 75 % and 100 % command signal

Spool type **E50/E55**

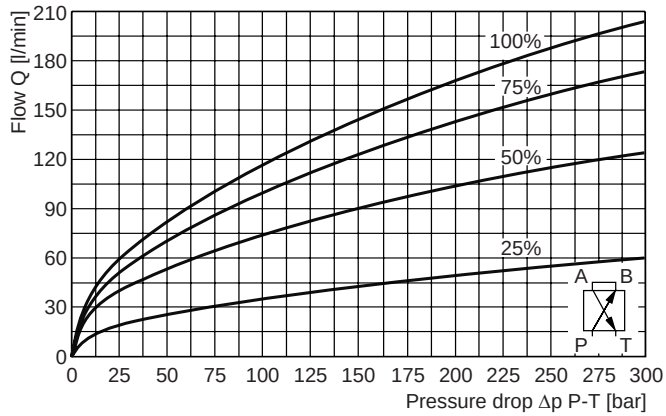

Flow curves
at Δp = 35 bar per metering edge

Spool type **E50/E55, E01/E02**

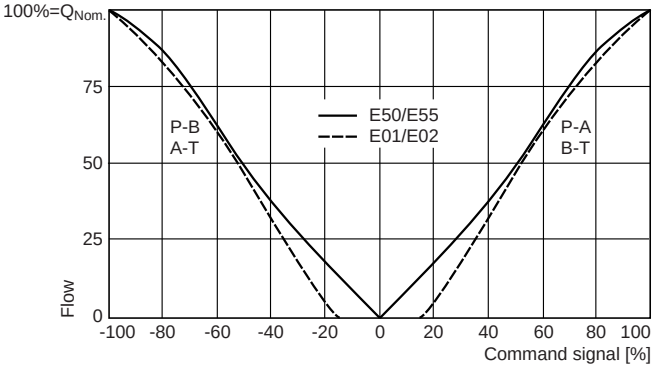

*** When exceeding the functional limits, for a period of time the valve will go into fail safe and power supply needs to be switched off/on to re-enable the valve.**

Pressure gain

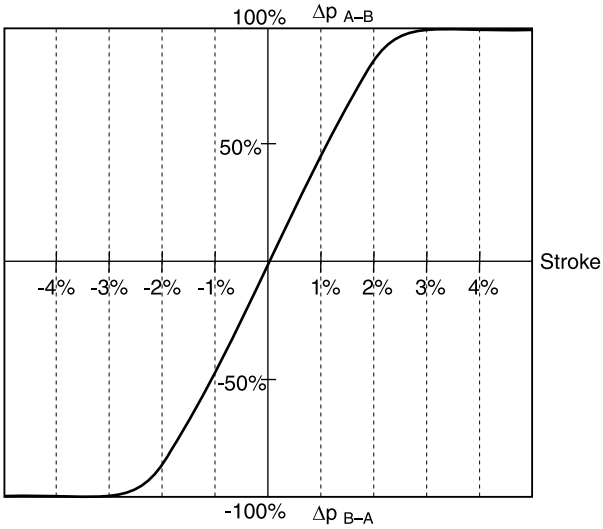

Frequency response
±5 % command signal

±90 % command signal

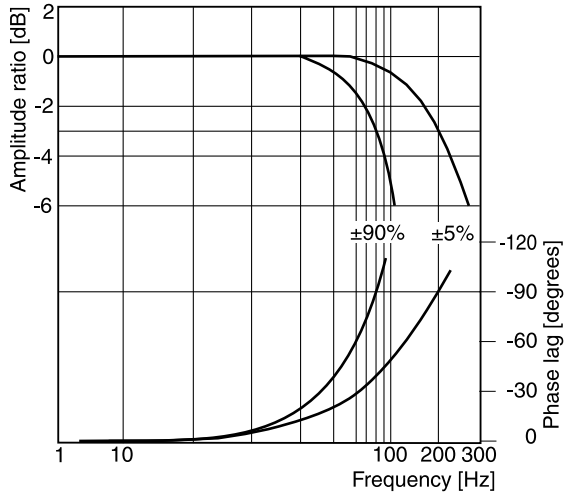

Code 0

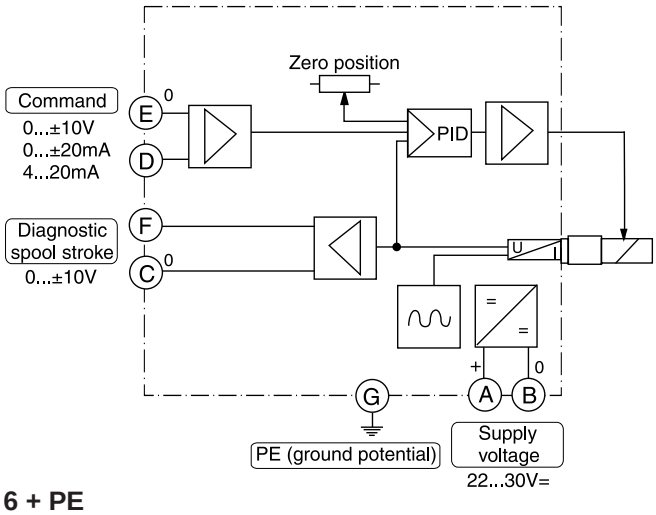

6 + PE

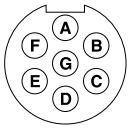

Code 5

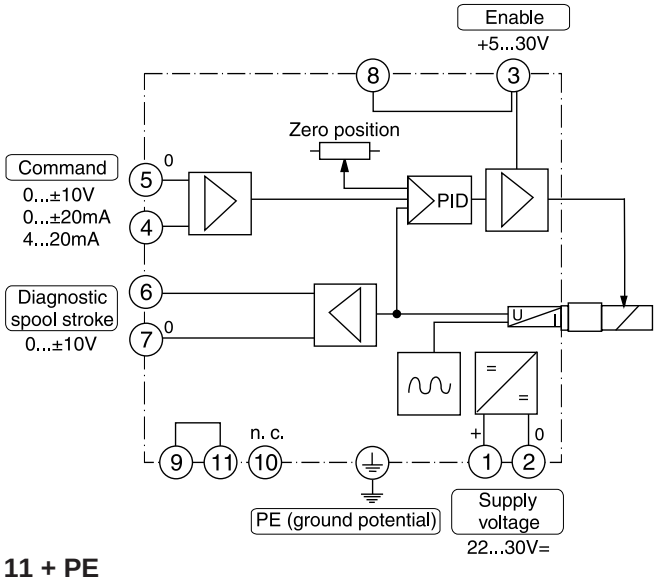

11 + PE

Code 7

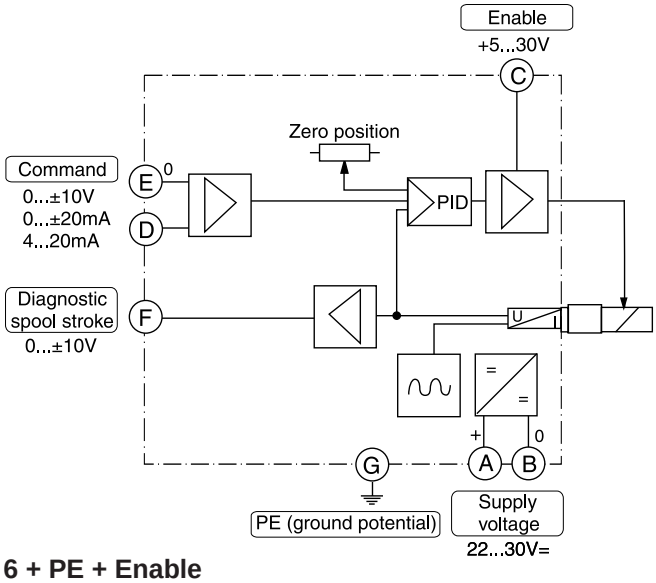

6 + PE + Enable

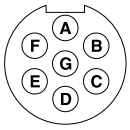

3

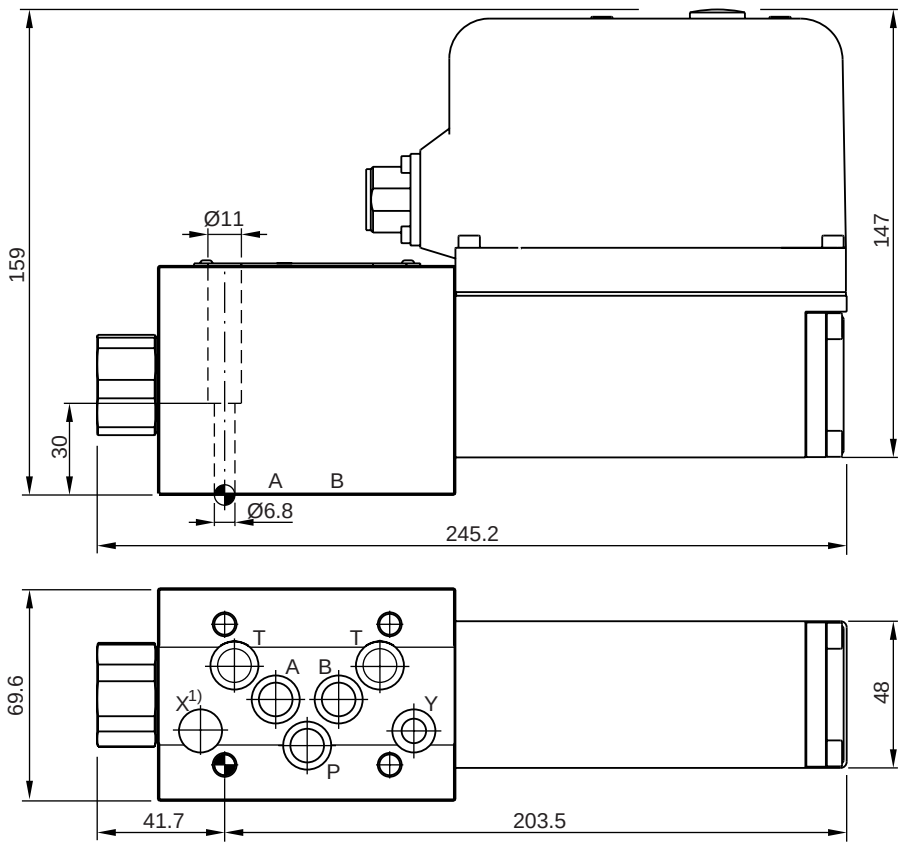

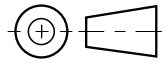

Surface finish	Kit			Kit
R_{max}6.3 ▱ 0.01/100	BK385	4xM6x40 ISO 4762-12.9	13.2 Nm ±15 %	NBR: SK-D3FP FPM: SK-D3FP-V HFC: SK-D3FP-H

[1] O-ring recess diameter on valve body.

The series of pilot operated control valves D30FP closes the gap between the direct operated D3FP valves and the conventional pilot operated D31FP valves.

Providing high flow capacity and practically no flow limits like D31FP in the envelope size of the D3FP.

The valve works with the hydraulic follower principle, with a moving sleeve as main spool.

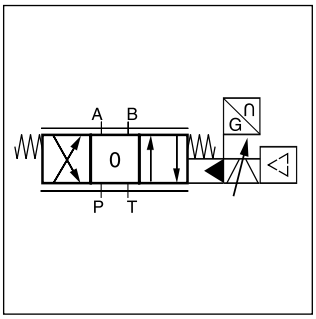

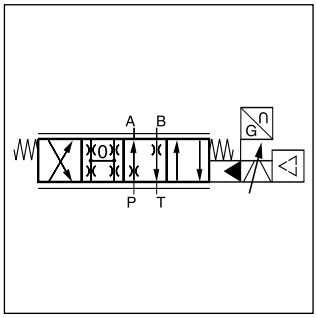

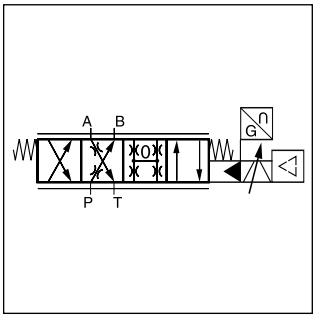

Technical features

- Pilot operated with hydraulic follower sleeve
- No flow limit up to 350 bar through the valve
- Defined spool positioning at power-down - optional P-A / B-T or P-B / A-T or center position (for overlapped spools)

CE

D30FP*3
with hydraulic follower principle

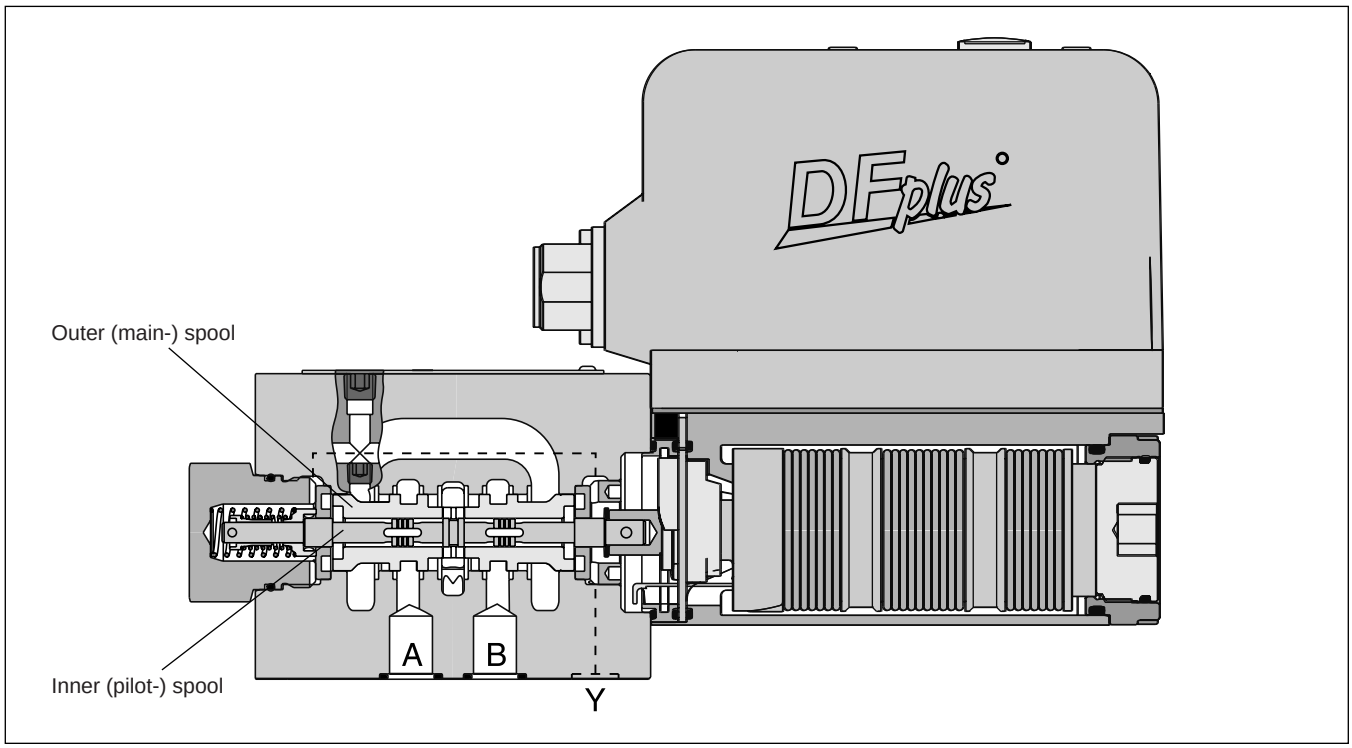

Ordering Code

Series D30FP

3

D	30	F	P							3	
Direct. control valve	Size DIN NG10 CETOP 05 NFPA D05	Proportional control	VCD	Spool type	Spool position on power down	Pilot connection	Seals	Command-signal	Acces-sories	Spool/ body design	Design series (not required for ordering)

Code	Spool type	Flow [l/min] at Δp 5 bar per metering edge
	Zerolap	
E50U		80
B60U		80
	Overlap	
E01U	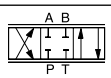	80
E02U		80
B31U	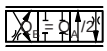	80
B32U		80

Code	Spool pos. at power down
A [2]	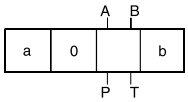
B [2]	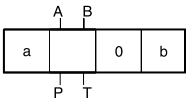
C [3]	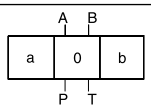

Code	Connection type
0	6 + PE acc. EN175201-804
5	11 + PE acc. EN175201-804

Code	Signal	Function
B	+/- 10 V	0...+10 V -> P-A
E	+/- 20 mA	0...+20 mA -> P-A
S	4...20 mA	12...20 mA -> P-A

Code	Seals
N	NBR
V	FPM
H	for HFC fluid

Code	Inlet	Drain
1 [1]	internal	external
4	internal	internal

Short delivery time for all variations

Please order plugs separately. See chapter 3 accessories.

[1] For tank pressure >35 bar.
[2] Approx. 10 % opening, only zerolapped spools.
[3] Only for overlapped spools.

D30FP UK.indd RH 29.08.2013

General		
Design		Pilot operated proportional DC valve
Actuation		VCD® actuator
Size		NG10 / CETOP 05 / NFPA D05
Mounting interface		DIN 24340 / ISO 4401 / CETOP RP121 / NFPA
Mounting position		unrestricted
Ambient temperature	[°C]	-20...+50
$MTTF_D$ value	[years]	50
Weight	[kg]	6.5
Vibration resistance	[g]	10 Sinus 5...2000 Hz acc. IEC 68-2-6 30 Random noise 20...2000 Hz acc. IEC 68-2-36 15 Shock acc. IEC 68-2-27
Hydraulic		
Max. operating pressure	[bar] [bar]	Ports P, A, B 350; Port T 35 for internal drain, 250 for external drain Port Y 35 [1)]
Fluid		Hydraulic oil as per DIN 51524 ... 51535, other on request
Fluid temperature	[°C]	-20...+60
Viscosity permitted recommended	[cSt] / [mm^2/s] [cSt] / [mm^2/s]	20...380 30...80
Filtration		ISO 4406 (1999) 18/16/13
Flow nominal at Δp=5 bar per control edge [2)]	[l/min]	80
Flow maximum	[l/min]	250
Leakage at 100 bar	[ml/min]	<1800 (Zerolap spool); <1000 (Overlap spool)
Pilot supply pressure	[bar]	>5 higher than tank pressure (only internal pilot oil supply)
Static / Dynamic		
Step response at 100 % step [3)]	[ms]	<7
Frequency response (±5 % signal) [3)]	[Hz]	120 (amplitude ratio -3 dB), 120 (phase lag -90°)
Hysteresis	[%]	<0.05
Sensitivity	[%]	<0.03
Temperature drift	[%/K]	<0.025
Electrical characteristics		
Duty ratio	[%]	100
Protection class		IP65 in accordance with EN 60529 (with correctly mounted plug-in connector)
Supply voltage/ripple	[V]	22 ... 30, ripple <5 % eff., surge free
Current consumption max.	[A]	3.5
Pre-fusing	[A]	4.0 medium lag
Input signal		
Voltage	[V]	10...0...-10, ripple <0.01 % eff., surge free, 0...+10 V P->A
Impedance	[kOhm]	100
Current	[mA]	20...0...-20, ripple <0.01 % eff., surge free, 0...+20 mA P->A
Impedance	[Ohm]	250
Current	[mA]	4...12...20, ripple <0.01 % eff., surge free, 12...20 mA P->A <3.6 mA = disable, >3.8 mA = according to NAMUR NE43
Impedance	[Ohm]	250
Differential input max.	[V]	30 for terminal D and E against PE (terminal G) 30 for terminal 4 and 5 against PE (terminal ⏚)
Enable signal (only code 5)	[V]	5...30, Ri = 9 kOhm
Diagnostic signal	[V]	+10...0...-10 / +Ub, rated max. 5 mA
EMC		EN 61000-6-2, EN 61000-6-4
Electrical connection	Code 0 Code 5	6 + PE acc. EN 175201-804 11 + PE acc. EN 175201-804
Wiring min.		
Code 0	[mm²]	7 x 1.0 (AWG 18) overall braid shield
Code 5	[mm²]	12 x 1.0 (AWG 18) overall braid shield
Wiring lenght max.	[m]	50

[1)] For applications with p_T>35 bar (max. 250 bar) the Y-port has to be connected and the plug in the Y-port has to be removed.

[2)] Flow rate for different Δp per control edge: $Q_x = Q_{Nom.} \cdot \sqrt{\frac{\Delta p_x}{\Delta p_{Nom.}}}$

[3)] Measured with load (100 bar pressure drop/two control edges).

3

Flow curves

at Δp = 5 bar per metering edge

Spool type **E01/02, E50**

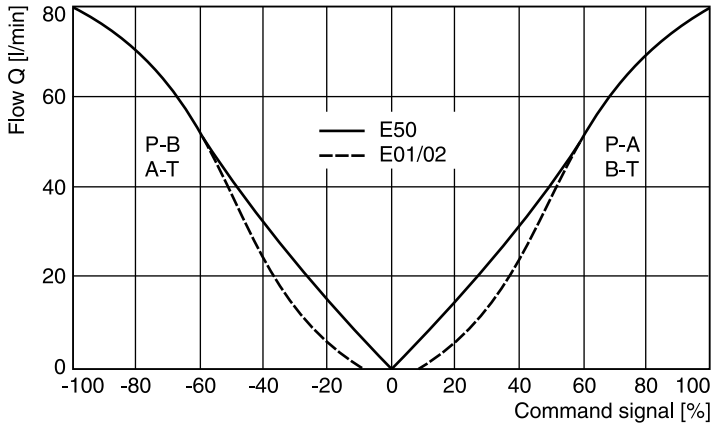

Pressure gain

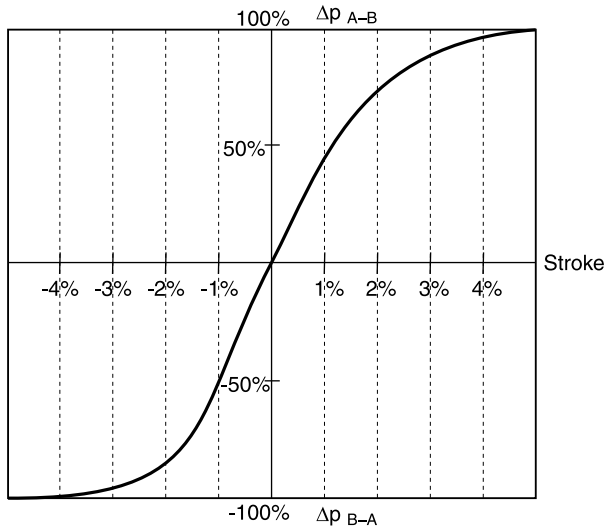

Frequency response

±5 % command signal

±25 % command signal

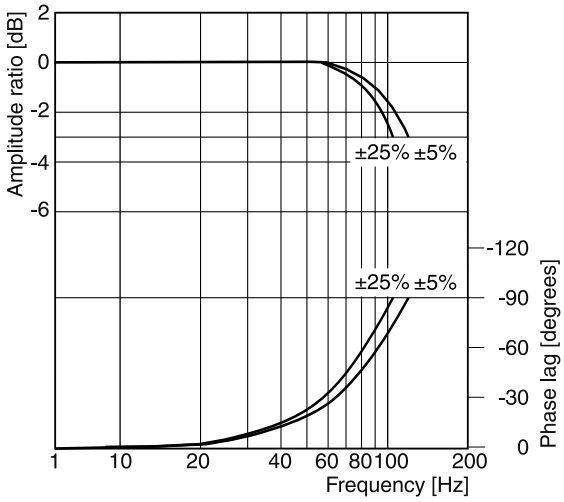

Block diagrams

Code 0

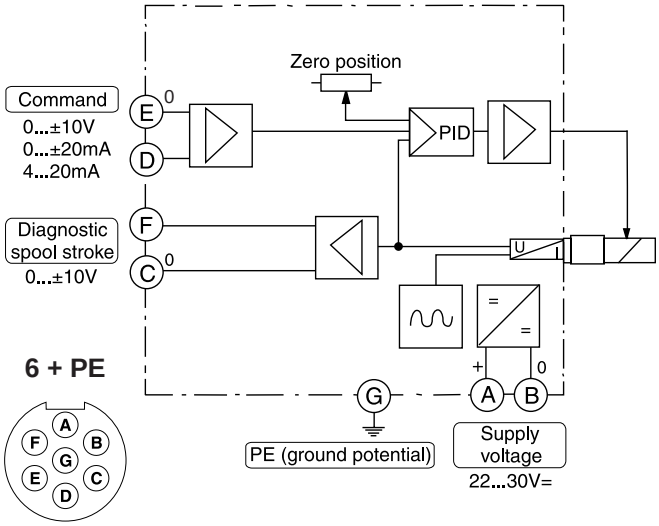

Code 5

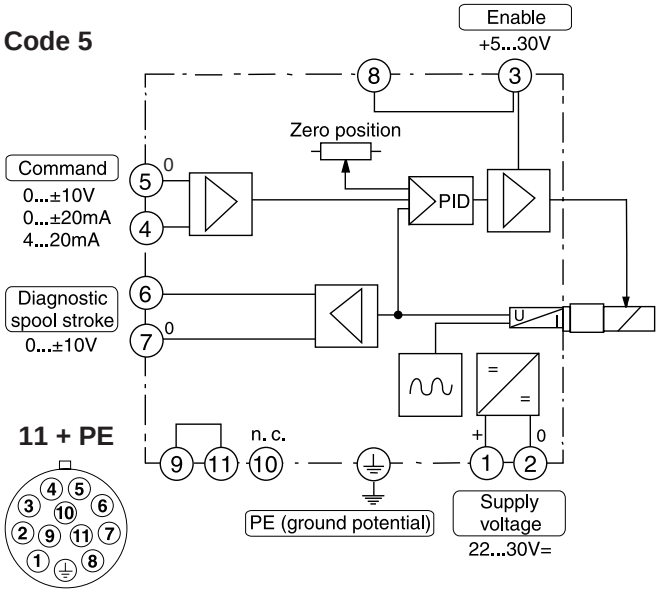

Dimensions

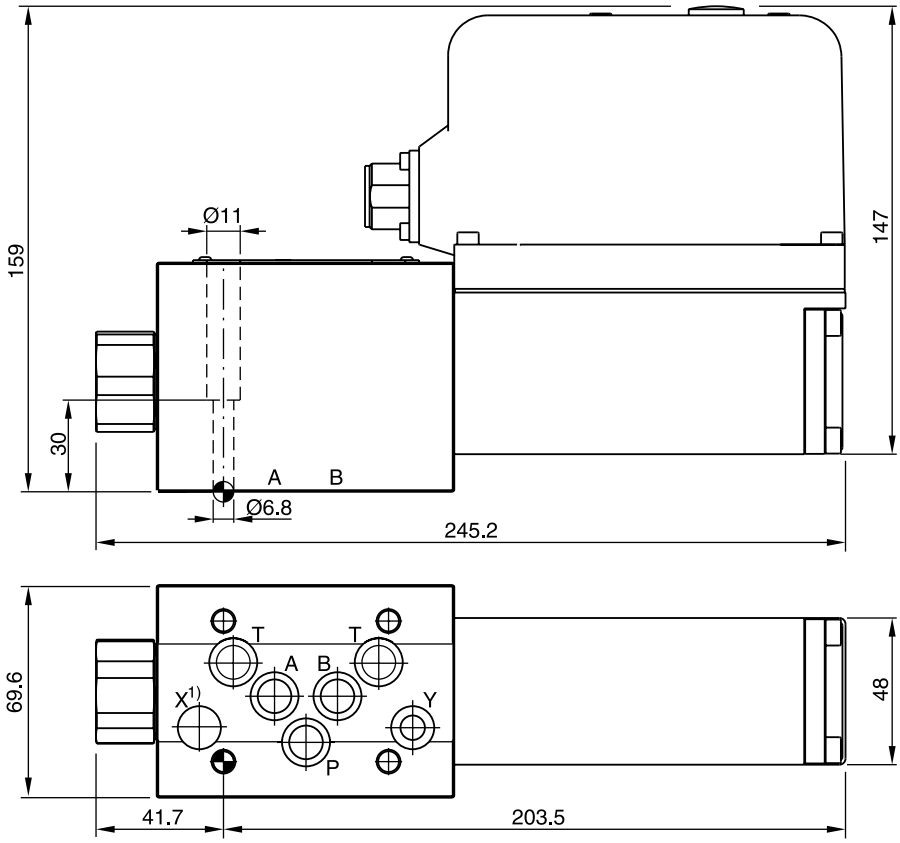

Surface finish	Kit			Kit
R_{max}6.3 ▱ 0.01/100	BK385	4xM6x40 ISO 4762-12.9	13.2 Nm ±15 %	NBR: SK-D3FP FPM: SK-D3FP-V

1) O-ring recess diameter on valve body.

3

The series of pilot operated servo proportional valves D*1FP transfers the advantages of the Parker patented Voice Coil Drive (VCD®) to larger frame sizes and thus high flow rates. The high dynamics / high precision drive of the pilot valve allows the optimum control of the main spool and results in servo class performance of the complete valves.

The D*1FP series is available in 5 sizes:

D31FP NG10 (CETOP 05)
D41FP NG16 (CETOP 07)
D81FP NG25 (CETOP 08) for port diam. up to 26 mm
D91FP NG25 (CETOP 08) for port diam. up to 32 mm
D111FP NG32 (CETOP 10)

The safety concept works with a safe 4th position at the D1FP pilot valve. This ensures that the main stage is hydraulically balanced at power down and allows to have the main spool spring centered (for overlapped spools) or approximately 10 % spring offset to spool position A or B (for zerolap spools).

The innovative integrated regenerative function into the A-line (optional) allows new energy saving circuits for differential cylinders. The hybrid version can be switched between regenerative mode and standard mode at any time.

Technical features

- High dynamics
- High flow
- Defined spool positioning at power-down - optional P-A/B-T or P-B/A-T or center position (for overlapped spools)
- Onboard electronics
- Energy saving A-regeneration
- Switchable hybrid version

D41FP Standard

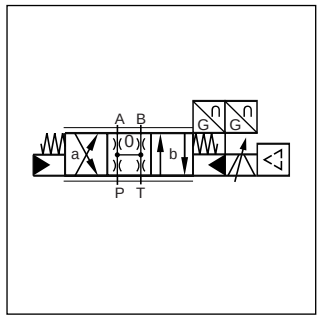

Standard D*1FPE

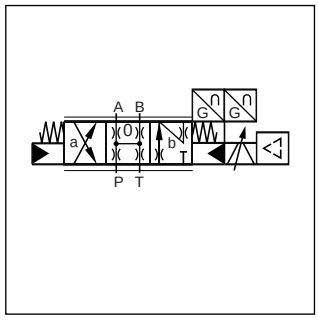

A-regeneration D*1FPR

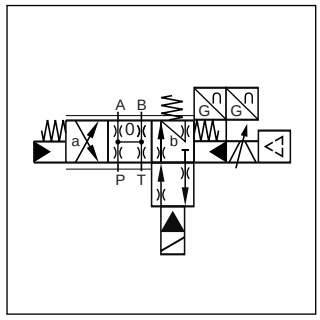

Hybrid D*1FPZ

Further literature about the opportunities of energy savings and more functional details of the integrated regeneration is available on request.

D41FPE52 (Standard)

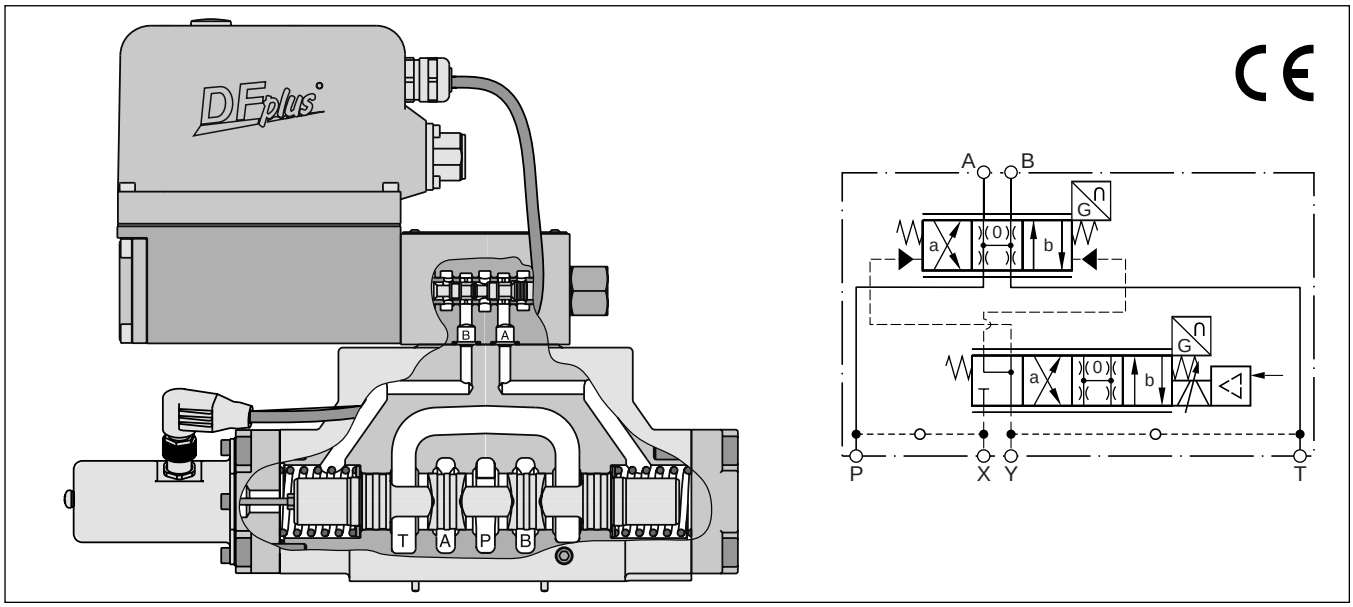

D*1FPR and D*1FPZ

Regenerative valve D*1FPR

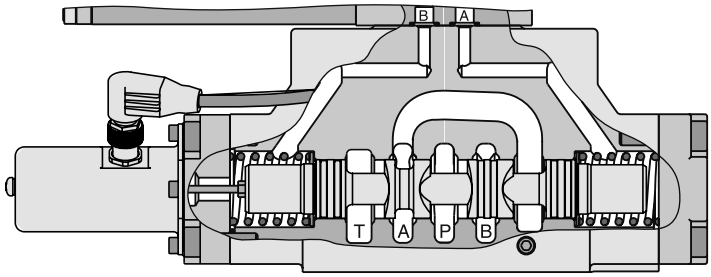

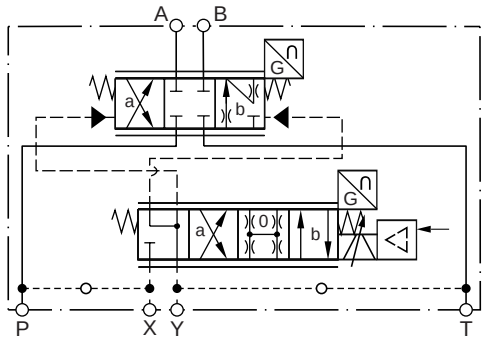

Hybrid valve D*1FPZ

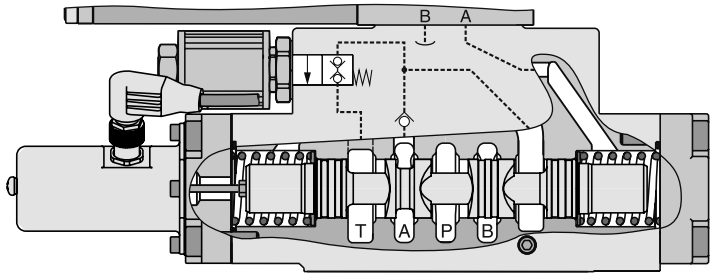

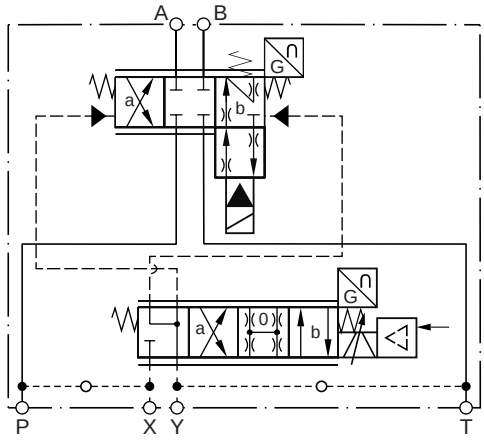

D*1FPR (regenerative valve)
Cylinder extending

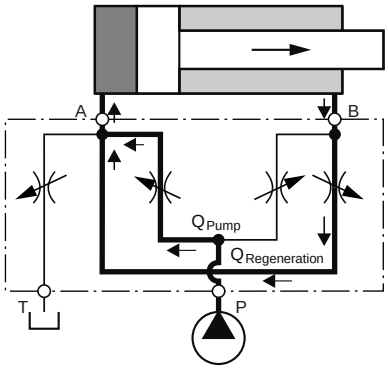

D*1FPZ (hybrid valve)
Cylinder extending
in regenerative mode (high speed)

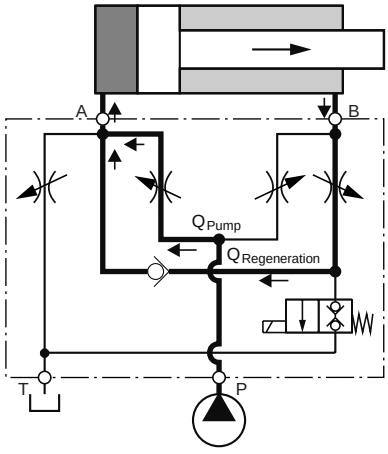

Cylinder extending
in standard mode (high force)

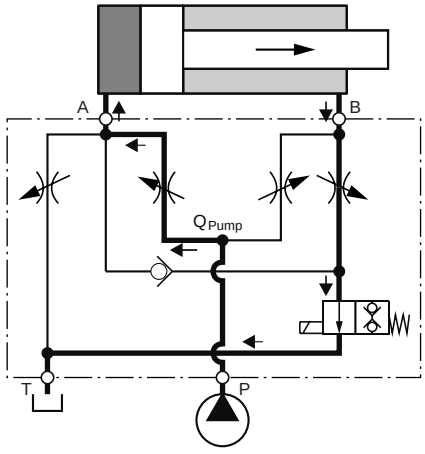

Flow rate in % of nominal flow

Size [1]	Spool	Port					
		A-T	P-A	P-B	B-A (R-Valve)	B-A (Hybrid)	B-T (Hybrid)
D41FPR/Z	31/32/61	100 %	50 %	100 %	50 %	40 %	20 %
D91FPR/Z	31/32/61	100 %	50 %	100 %	50 %	50 %	25 %
D111FPR/Z	31/32/61	on request					

[1] D31FP: For size NG10 please refer solution with sandwich- and adaptor plates "A10-1664 / A10-1665L / H10-1662 / H10-1666L" in chapter 12.

D_1FP UK.indd RH 29.08.2013

3

D		1	F	P									
Directional control valve	Size	NG06 pilot	Propor-tional control	VCD perfor-mance	Function	Flow	Spool position on power down	Pilot connec-tions	Seals	Command signal	Electronic options	Valve option	Design series (not required for ordering)

Code	Size
3	NG10 / CETOP 05
4	NG16 / CETOP 07
8	NG25 / CETOP 08
9 [1]	NG25 / CETOP 08
11	NG32 / CETOP 10

Standard		NEW: regenerative function [4] [5]		NEW: hybrid function [5] [6]	
Code	Spool type	Code	Spool type	Code	Spool type
overlap 10 %		overlap 10 %		overlap 10 %	
E01	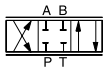	R31		Z31	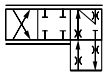
E02	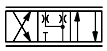	R32	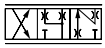	Z32	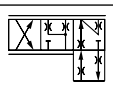
B31	$Q_B = Q_A/2$ 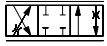				
B32	$Q_B = Q_A/2$ 				
zerolap		zerolap		zerolap	
E52		R61		Z61	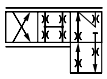
B61	$Q_B = Q_A/2$ 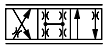				

Code	Flow [l/min] at Δp = 5 bar per metering edge				
	D31	D41	D81	D91	D111
D	90	—	—	—	—
E	120	—	—	—	—
F	—	200	—	—	—
H	—	—	400	450	—
L	—	—	—	—	1000

Code	Valve option
0	Standard for spool code B, E, R
L [7]	Hybrid valve 24 V normaly closed for spool code Z

Code	Electronic options
0	6+PE acc. EN175201-804
5	11+PE acc. EN175201-804
7	6+PE + enable

Code	Signal	Function
B	0...±10 V	0...+10 V P -> B
E	0...±20 mA	0...+20 mA P -> B
K	0...±10 V	0...+10 V P -> A
S	4...20 mA	12...20 mA P -> A

Code	Seals
N	NBR
V	FPM
H	for HFC fluid

Code	Inlet	Drain
1	internal	external
2	external	external
4	internal	internal
5	external	internal

Code	Spool pos. on power down
A [2]	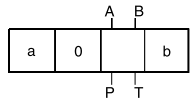
B [2]	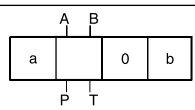
C [3]	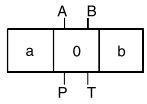

Short delivery time for all variations

[1] For enlarged connections Ø 32 mm.
[2] Approx. 10 % opening, only zero lapped spools.
[3] For overlapped spools.
[4] Not for D81FP.
[5] For regenerative and hybrid function at D31FP (NG10) please refer to solutions with sandwich and adaptor plates "A10-1664 / A10-1665L / H10-1662 / H10-1666L" in chapter 12.

D31FP spooltype: R31 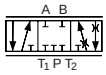 R32 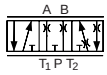 R61 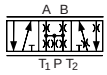

[6] Not for valve D31FP and D81FP.
[7] See page "Regenerative and hybrid function" (not for D31FP).

Please order connector separately. See chapter 3 accessories.

D_1FP UK.indd RH 29.08.2013

General					
Design		Servo proportional directional control valve, pilot operated			
Actuation		VCD®-actuator			
Size		**NG10 (CETOP 05)**	**NG16 (CETOP 07)**	**NG25 (CETOP 08)**	**NG32 (CETOP 10)**
		D31	**D41**	**D81 / D91**	**D111**
Mounting Interface		DIN 24340 / ISO 4401 / CETOP RP121 / NFPA			
Mounting position		unrestricted			
Ambient temperature	[°C]	-20...+60			
$MTTF_D$ value	[years]	50			
Weight	[kg]	11.3	14.2	23.5	64.5
Vibration resistance	[g]	10 Sinus 5...2000 Hz acc. IEC 68-2-6 30 Random noise 20...2000 Hz acc. IEC 68-2-36 15 Shock acc. IEC 68-2-27			
Hydraulic					
Max. operating pressure	[bar]	Internal pilot drain P, A, B, X 350; T, Y 35 External pilot drain P, A, B, T, X 350; Y 35			
Fluid		Hydraulic oil acc. DIN 51524 ... 51535, other on request			
Fluid temperature	[°C]	-20...+60			
Viscosity permitted	[cSt] / [mm2/s]	20...380			
Viscosity recommended	[cSt] / [mm2/s]	30...80			
Filtration		ISO 4406 (1999) 18/16/13			
Nominal flow at Δp = 5 bar per control edge [1]	[l/min]	120	200	400 / 450	1000
Max. recommended flow (standard)	[l/min]	250	600	1000	3000
Regenerative B-A / B-T		depending on application, see flow curves			
Leakage at 100 bar					
Overlapped spool	[ml/min]	200	200	600	1000
Zerolapped spool	[ml/min]	900	900	1000	5000
Pilot	[ml/min]	< 500			
Pilot supply pressure	[bar]	20...350			
Pilot flow during step response at 210 bar	[l/min]	10	12	24	40
Static / Dynamic					
Step response at 100 % stroke [2]	[ms]	10	13	19	45
Frequency response					
Amplitude ±5 % at 210 bar	[Hz]	128	95	95	40
Phase ±5 % at 210 bar	[Hz]	118	95	90	75
Hysteresis	[%]	< 0.1			
Sensitivity	[%]	< 0.05			
Temperature drift of Center Position	[%/K]	< 0.025			
Electrical					
Duty ratio	[%]	100			
Protection class		IP65 in accordance with EN 60529 (with correctly mounted plug-in connector)			
Supply voltage / ripple	[V]	22...30, ripple < 5 % eff., surge free			
Current consumption max.	[A]	3.5			
Pre-fusing	[A]	4.0 A medium lag			
Input signal Code K (B) voltage	[V]	+10...0...-10, ripple < 0.01 % eff., surge free, 0...+10 V P–>A (P–>B)			
Impedance	[kOhm]	100			
Code E voltage	[mA]	+20...0...-20, ripple < 0.01 % eff., surge free, 0...+20 mA P–>B			
Impedance	[Ohm]	250			
Code S current	[mA]	4...12...20, ripple < 0.01 % eff., surge free, 12...20 mA P–>A			
Impedance	[Ohm]	250			
		< 3.6 mA = enable off, > 3.8 mA = enable on acc. NAMUR NE43			
Input Capacitance typ.	[nF]	1			
Differential input max. Code 0	[V]	30 for terminal D and E against PE (terminal G) 11 for terminal D and E against 0V (terminal B)			
Code 5	[V]	30 for terminal 4 and 5 against PE (terminal ⏚) 11 for terminal 4 and 5 against 0V (terminal 2)			
Code 7	[V]	30 for terminal D and E against PE (terminal G)			
Enable signal Code 5/7	[V]	5...30, Ri = 9 kOhm			
Diagnostic signal	[V]	+10...0...-10 / +Ub, rated max. 5 mA			
EMC		EN 61000-6-2, EN 61000-6-4			
Electrical connection Code 0/7		6 + PE acc. EN 175201-804			
Code 5		11 + PE acc. EN 175201-804			
Wiring min. Code 0/7	[mm²]	7 x 1.0 (AWG16) overall braid shield			
Code 5	[mm²]	8 x 1.0 (AWG16) overall braid shield			
Wiring lenght max.	[m]	50			

[1] Flow rate for different Δp per control edge: $Q_x = Q_{Nom.} \cdot \sqrt{\frac{\Delta p_x}{\Delta p_{Nom.}}}$

[2] Measured with load (210 bar pressure drop/two control edges).

D_1FP UK.indd RH 29.08.2013

Electrical characteristics hybrid option

Duty ratio		100 %		
Protection class		IP 65 in accordance with EN 60529 (with correctly mounted plug-in connector)		
		D41	D91	D111
Supply voltage	[V]	24	24	24
Tolerance supply voltage	[%]	±10	±10	±10
Current consumption	[A]	1.21	0.96	1.29
Power consumption	[W]	29	23	31
Solenoid connection		Connector as per EN 175301-803		
Wiring min.	[mm²]	3 x 1.5 recommended		
Wiring length max.	[m]	50 recommended		

With electrical connections the protective conductor (PE ⏚) must be connected according to the relevant regulations.

3

Wiring

Code 0, 6 + PE acc. EN 175201-804

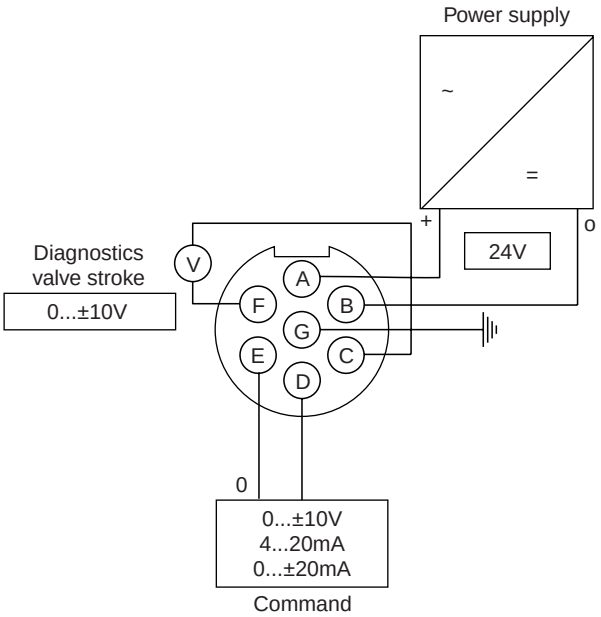

Code 5, 11 + PE acc. EN 175201-804

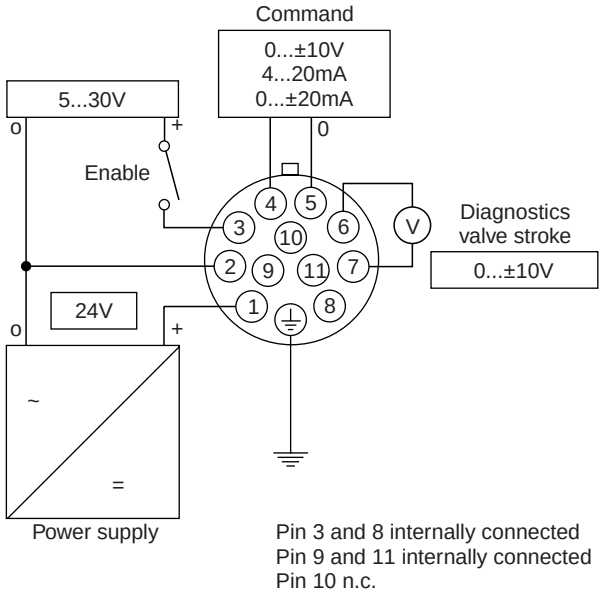

Pin 3 and 8 internally connected
Pin 9 and 11 internally connected
Pin 10 n.c.

Code 7, 6 + PE acc. EN 175201-804 + enable

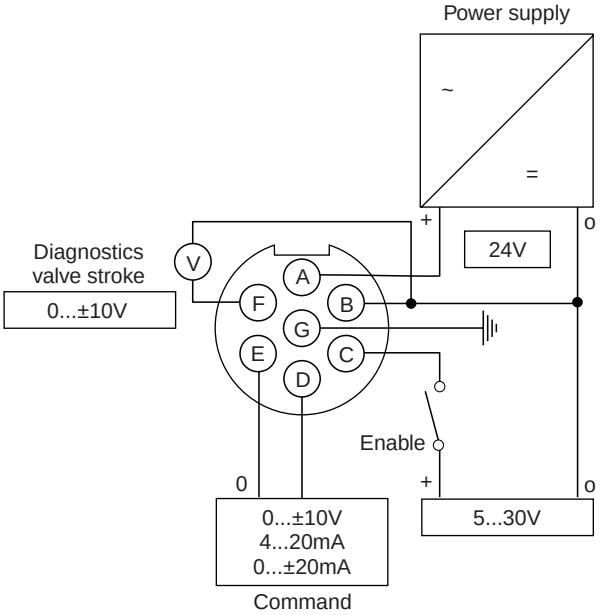

Frequency response
±5 % / ±25 % / ±90 % command signal
Dynamics at 210 bar pilot supply pressure

D31FP

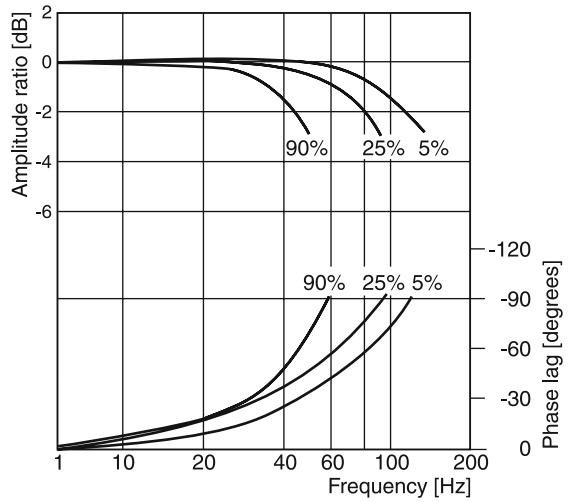

D41FP

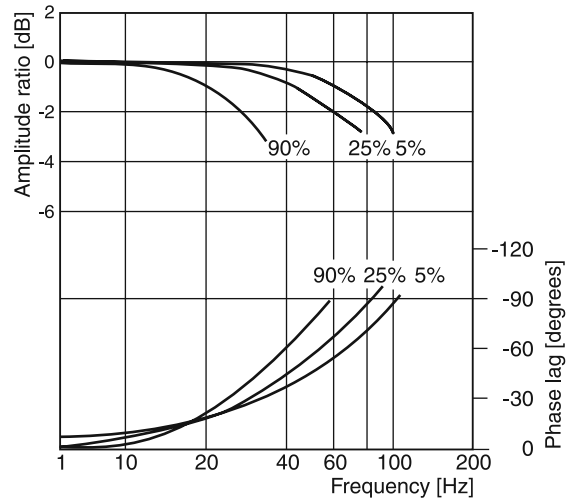

D81/91FP

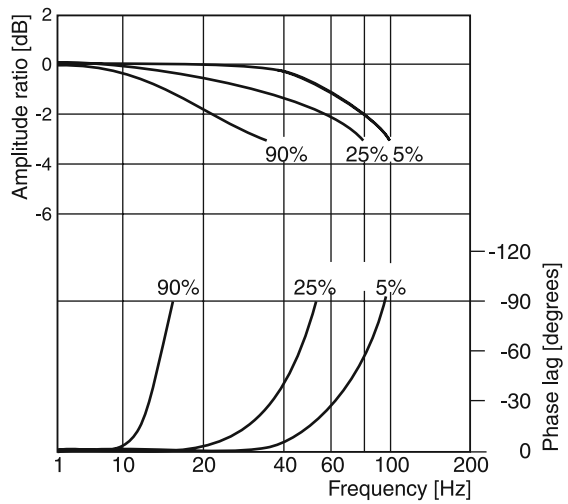

D111FP

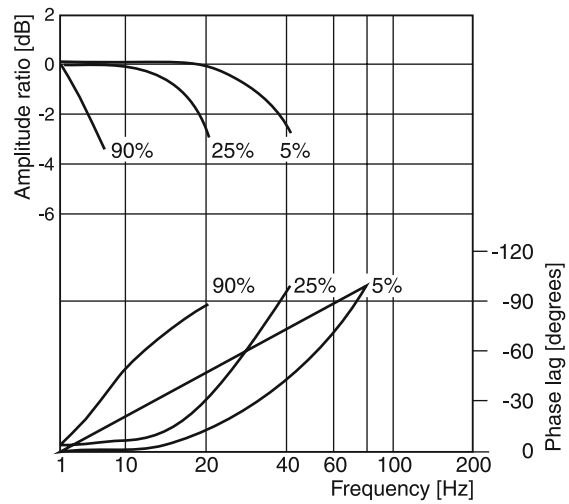

Flow curves D*1FPB/E
at Δp = 5 bar per metering edge

D31FP
spool type E01/02/52, B31/32/61

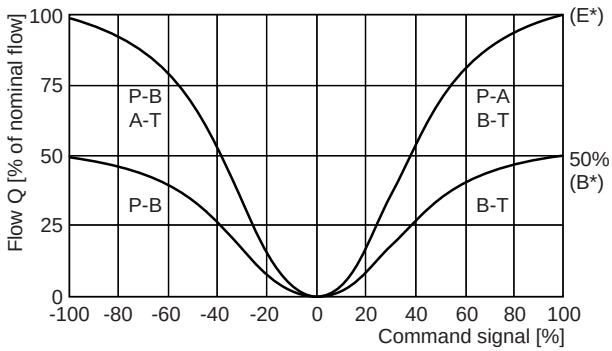

D41FP
spool type E01/02/52, B31/32/61

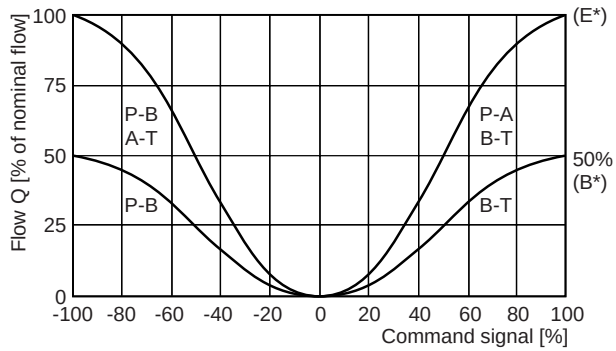

All characteristic curves measured with HLP46 at 50 °C.

3

Flow curves

D81/91FP

Spool type E01/02/52, B31/32/61

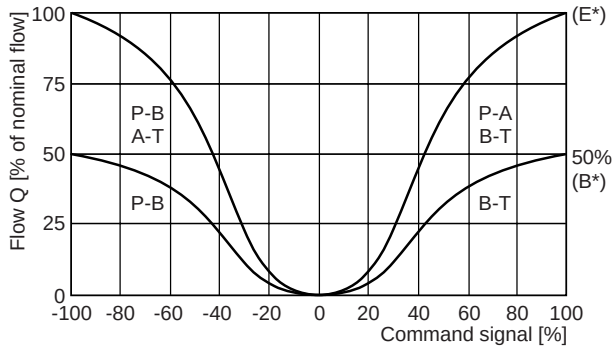

D111FP

Spool type E01/02/52, B31/32/61

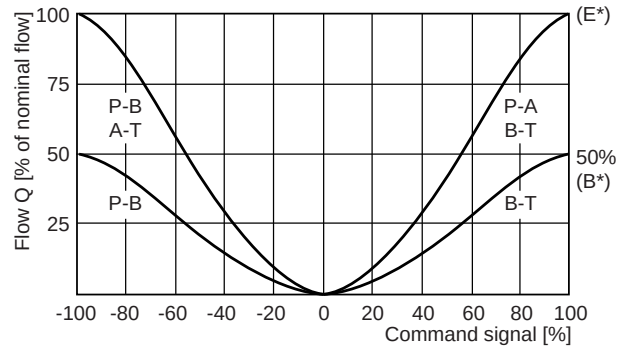

Flow curves D*1FPR/Z

at Δp = 5 bar per metering edge

D31FP

Spool type R31/32/61

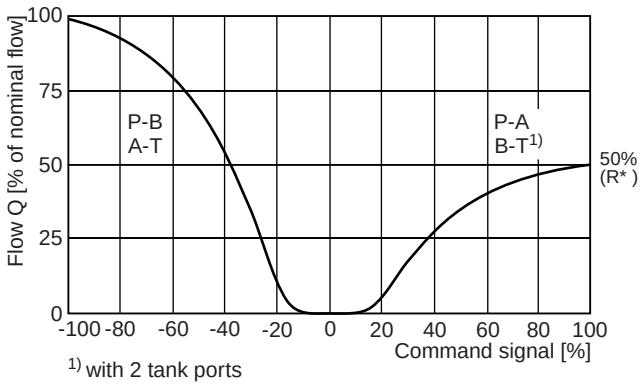

1) with 2 tank ports

D41FP

Spool type R/Z 31/32/61

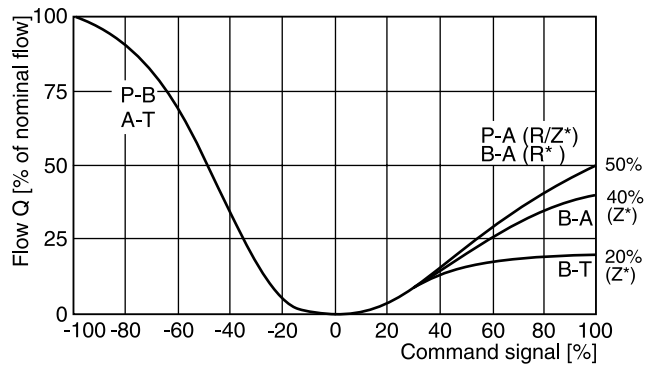

D91FP spool type R/Z 31/32/61

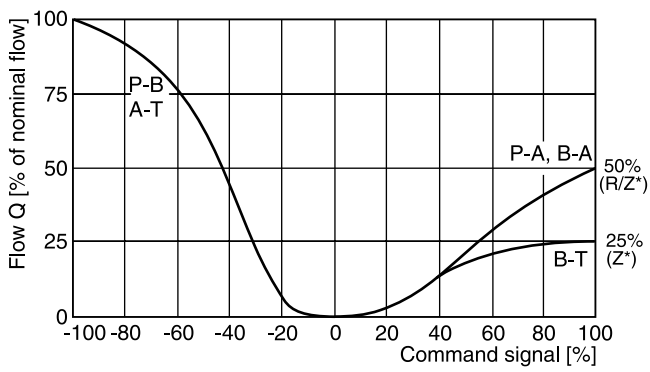

D111FP

spool type R/Z* on request

Detail:
Standard, regenerative and hybrid flow curves

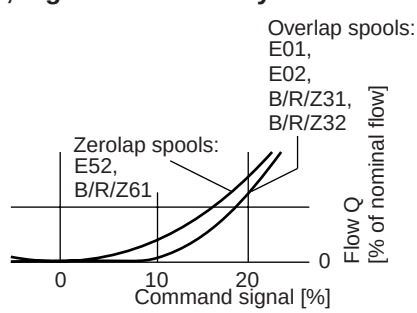

Pilot oil inlet (supply) and outlet (drain)

○ **open,** ● **closed**

Pilot oil Inlet	Pilot oil Drain	B	C
internal	external	○	●
external	external	●	●
internal	internal	○	○
external	internal	●	○

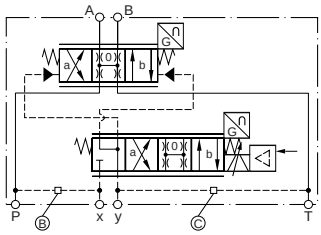

D31FPB/E

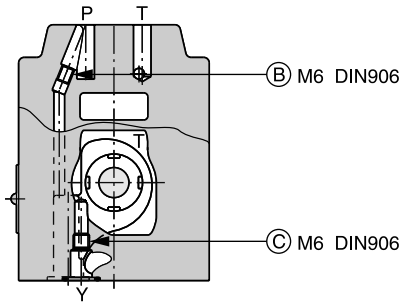

(drawn offset)

D31FPR

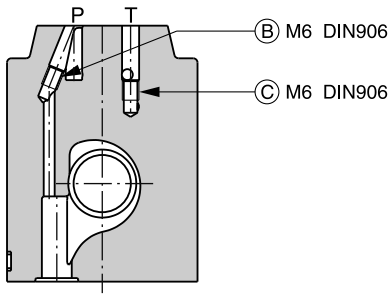

D41FPB/E

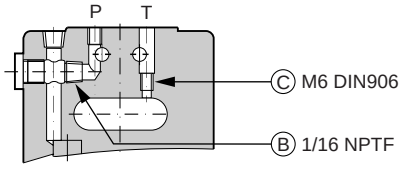

D41FPR

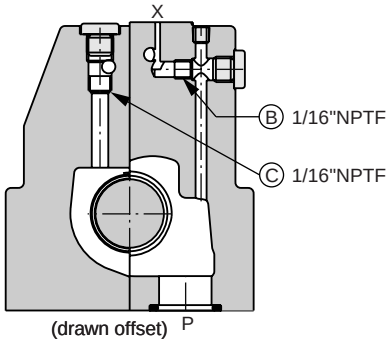

(drawn offset)

D41FPZ

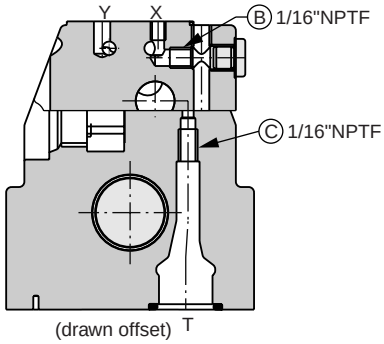

(drawn offset)

D91FPB/E

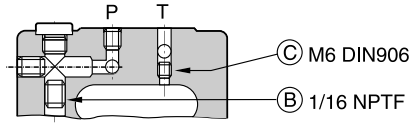

D91FPR

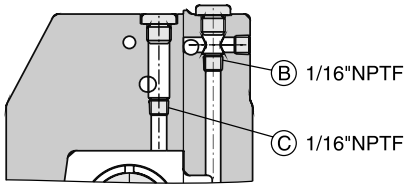

(drawn offset)

D91FPZ

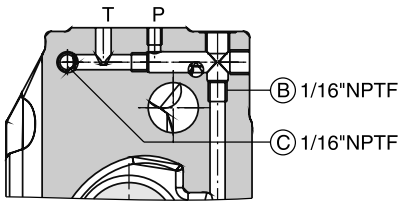

D111FPB/E

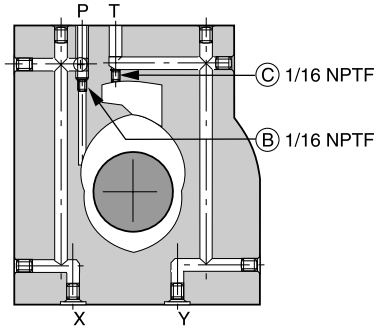

D111FPR

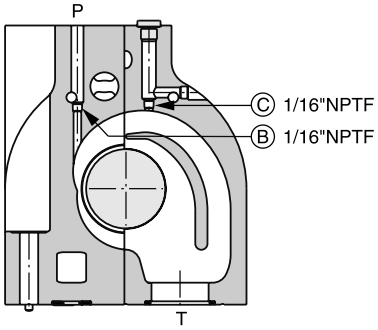

(drawn offset)

D111FPZ

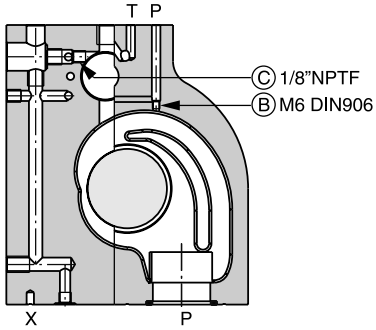

(drawn offset)

3

D31FP

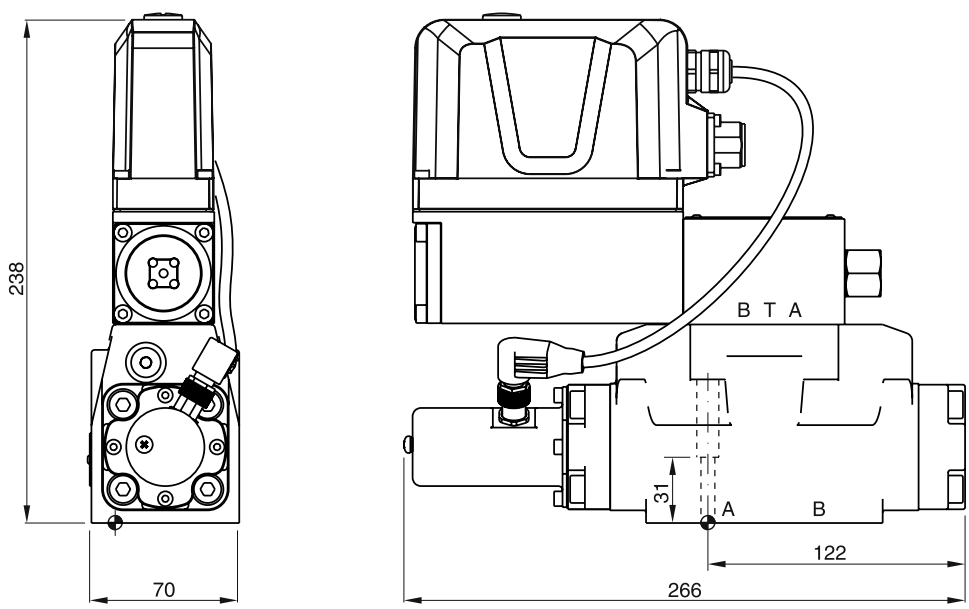

Regenerative and hybrid function with additional plate "A10-1664 / A10-1665L / H10-1662 / H10-1666L", see chapter 12.

Surface finish	Kit			Kit
R_{max}6.3 ▱ 0.01/100	BK385	4x M6x40 ISO 4762-12.9	13.2 Nm ±15 %	NBR: SK-D31FP FPM: SK-D31FP-V

D41FP

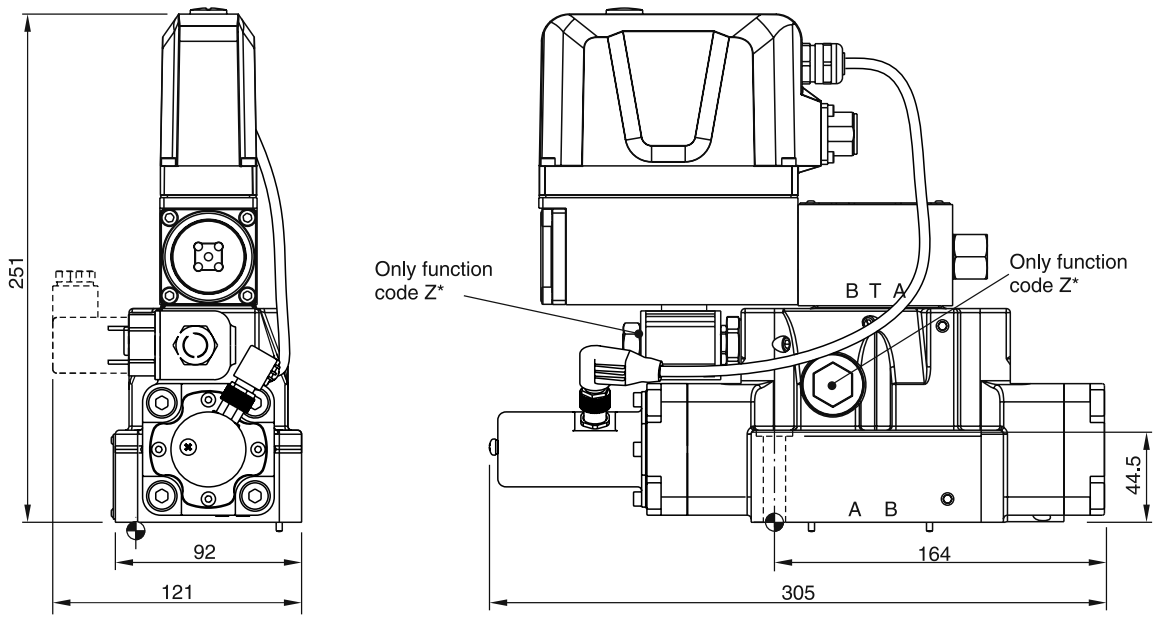

Surface finish	Kit			Kit
R_{max}6.3 ▱ 0.01/100	BK320	2x M6x55 4x M10x60 ISO 4762-12.9	13.2 Nm ±15 % 63 Nm ±15 %	NBR: SK-D41FP FPM: SK-D41FP-V

D81/91FP

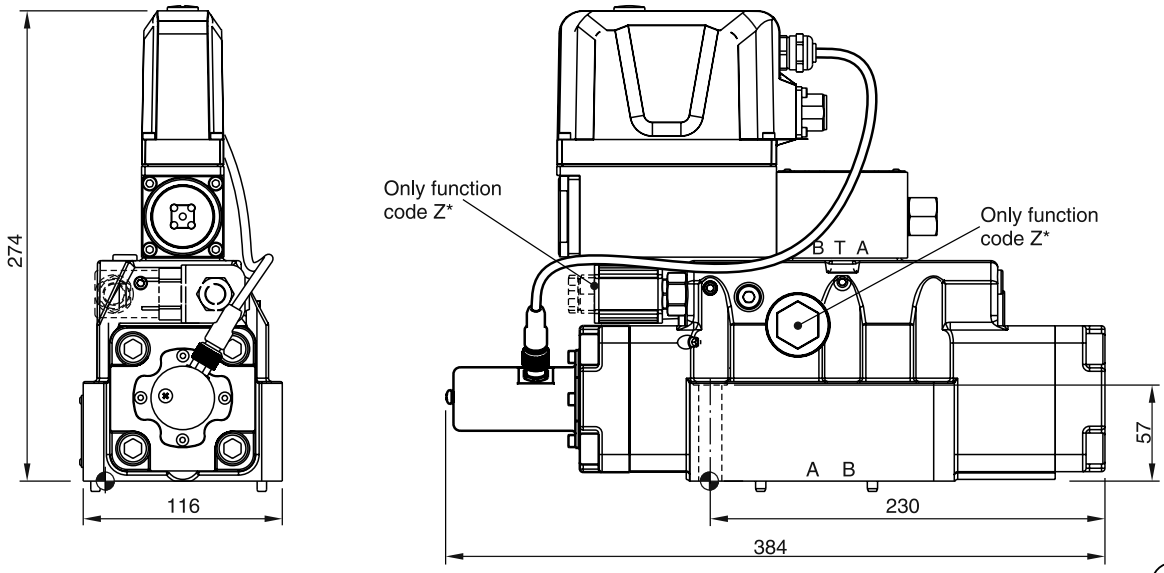

Surface finish	Kit			Kit
R_{max}6.3 ▱ 0.01/100	BK360	6x M12x75 ISO 4762-12.9	108 Nm ±15 %	NBR: SK-D81/D91FP FPM: SK-D81/D91FP-V

D111FP

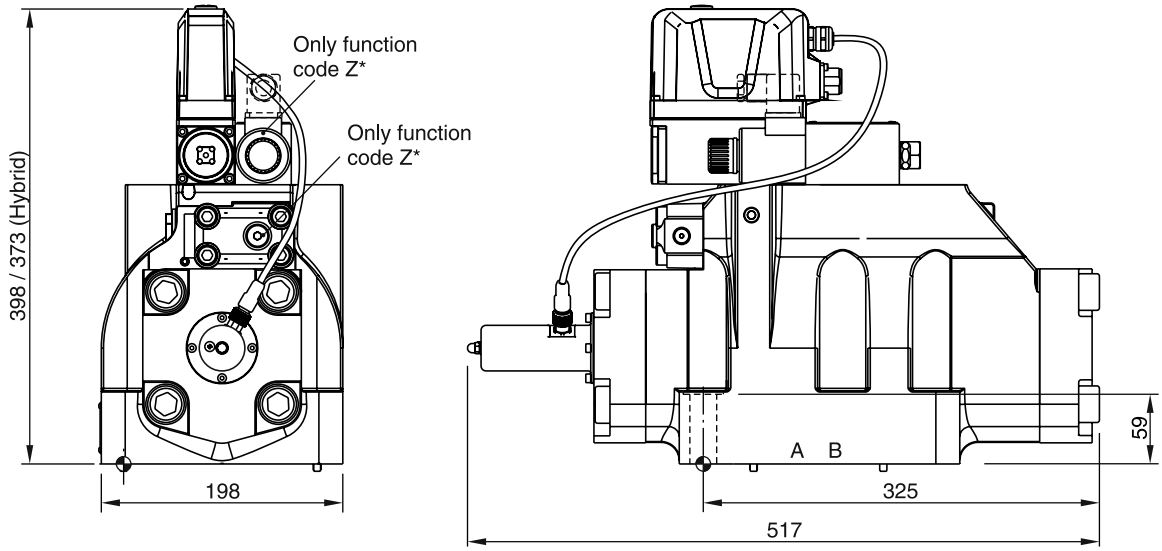

Surface finish	Kit			Kit
R_{max}6.3 ▱ 0.01/100	BK386	6x M20x90 ISO 4762-12.9	517 Nm ±15 %	NBR: SK-D111FP FPM: SK-D111FP-V

D_1FP UK.indd RH 29.08.2013

3

Solenoid connector
D*FB, D*1FB

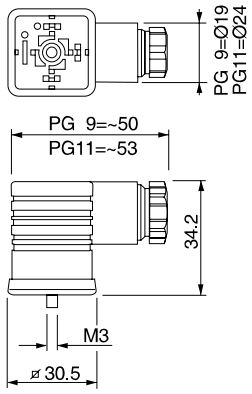

Description	Variation	Order No.
EN 175301-803 2+PE	PG 9 black B	5001710
EN 175301-803 2+PE	PG 9 grey A	5001711
EN 175301-803 2+PE	PG 11 black B	5001716
EN 175301-803 2+PE	PG 11 grey A	5001717

Monitor switch connector
D*1FB / D*1FH

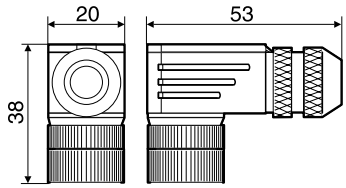

Description	Order No.
IEC 61076-2-101 M12 / 4 + PE	5004109

Central connector
D*FB OBE / D*1FB OBE / D*1FH / D*FP*0 / D*1FP*0 / D*1FP*7

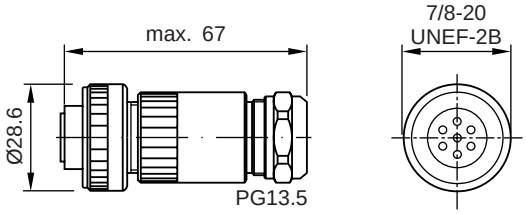

Description	Order No.
EN 175201-804 6 + PE	5004072

Central connector
D*FP*5 / D*1FP*5

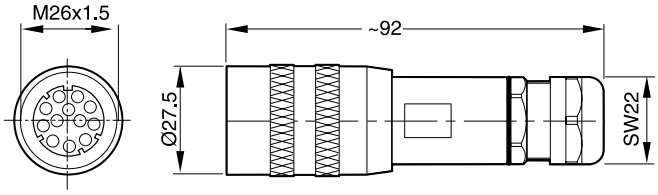

Description	Order No.
EN 175201-804 11 + PE	5004711

Size 6, mounting pattern to ISO 4401-03-03-0-05

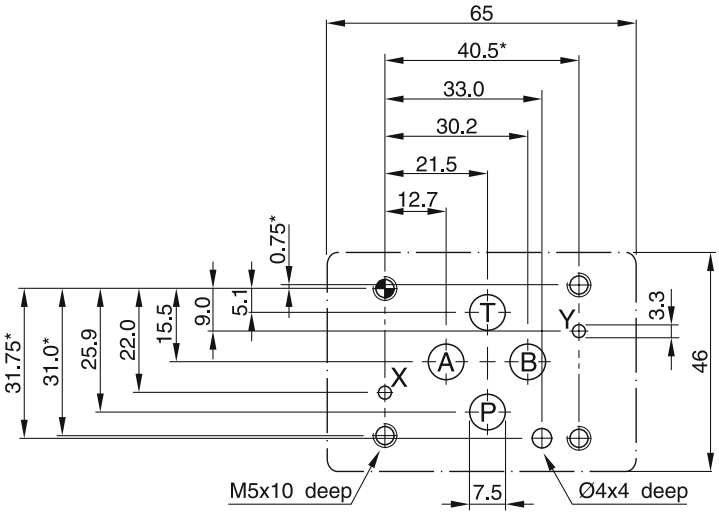

Size 10, mounting pattern to ISO 4401-05-05-0-05

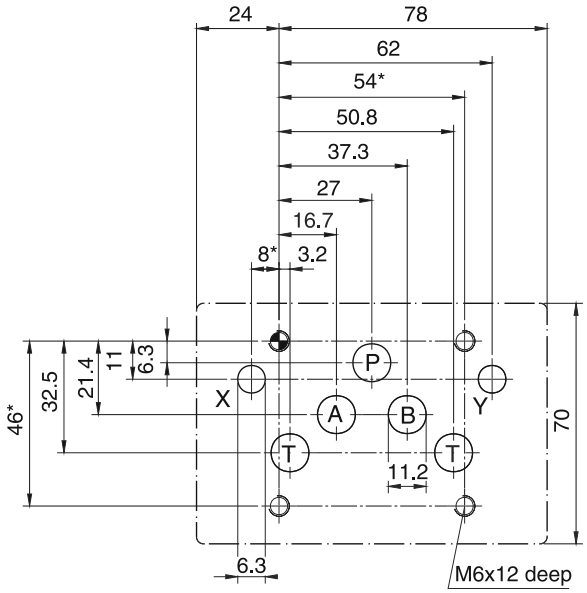

Deviating from ISO 4401
these diameters are possible:
X, Y = Ø 8 max.

Size 16, mounting pattern to ISO 4401-07-07-0-05

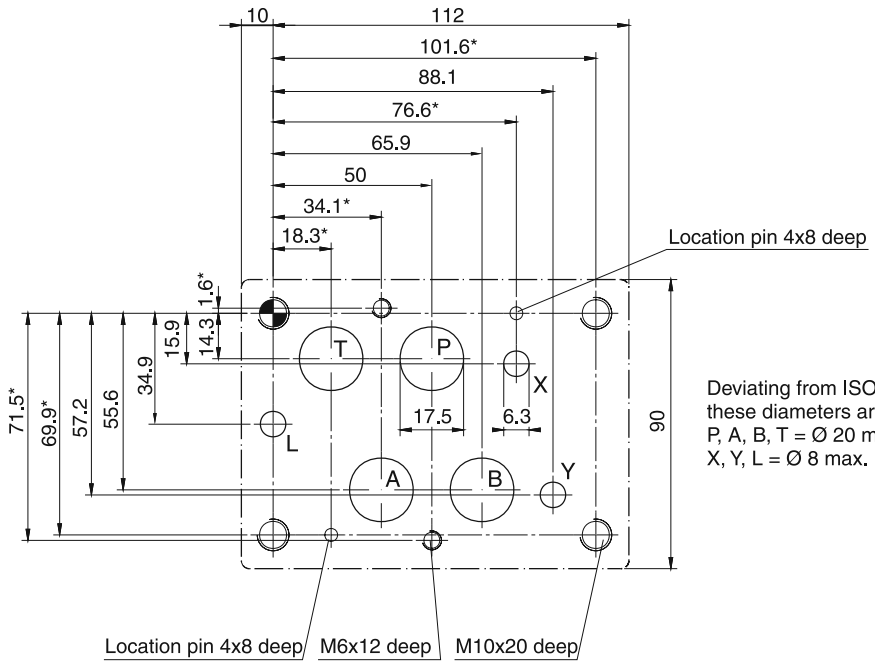

Deviating from ISO 4401
these diameters are possible:
P, A, B, T = Ø 20 max.
X, Y, L = Ø 8 max.

With * marked dimensions ± 0.1mm. All other dimensions ± 0.2mm.
Subplates and manifolds see chapter 12.

Access03.INDD RH 29.08.2013

3

Size 25, mounting pattern to ISO 4401-08-08-0-05

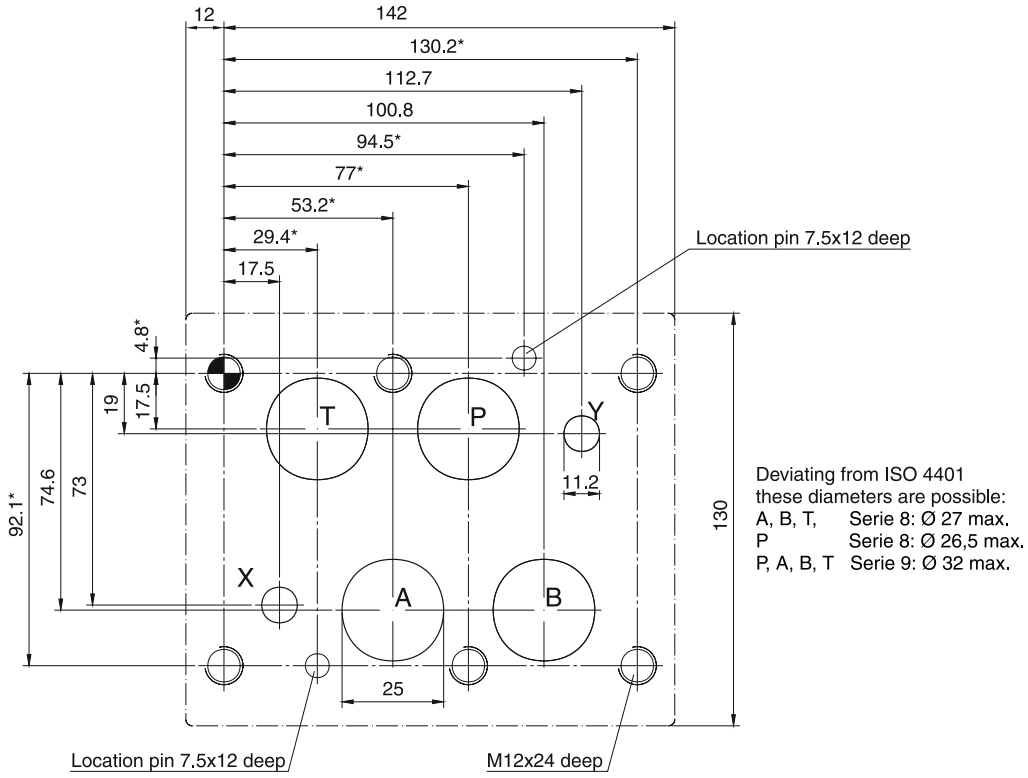

Size 32, mounting pattern to ISO 4401-10-09-0-05

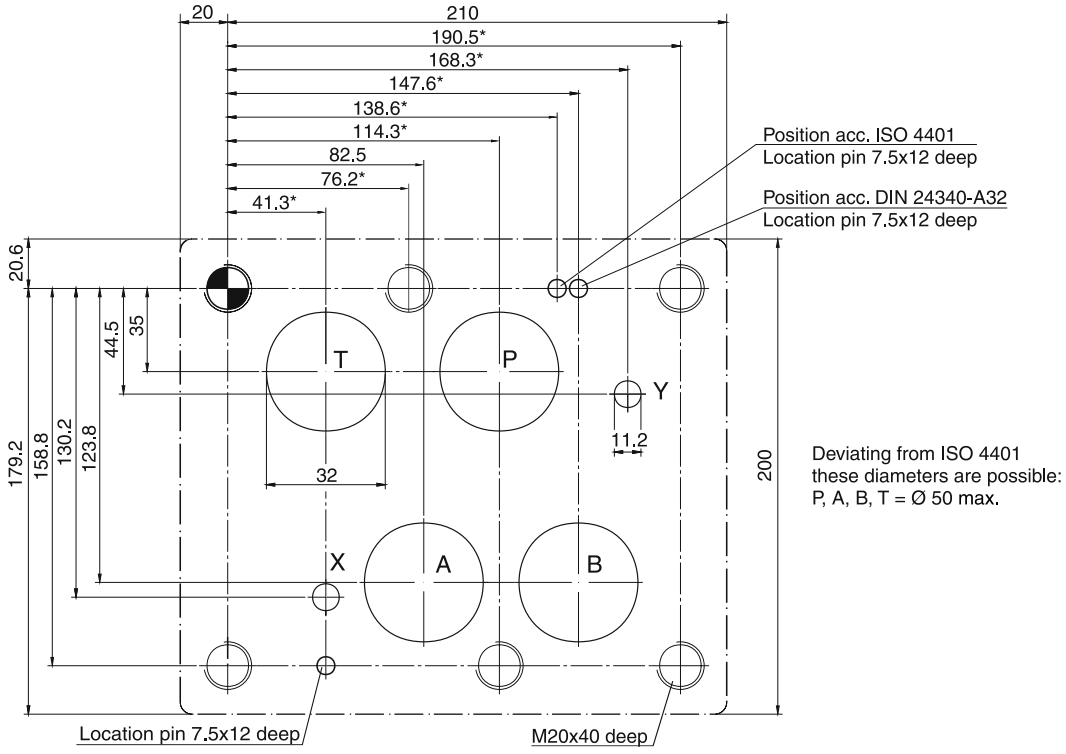

With * marked dimensions ± 0.1mm. All other dimensions ± 0.2mm.
Subplates and manifolds see chapter 12.

Access03.INDD RH 29.08.2013